Model LV16
Mini-Diameter Submersible Liquid Level Transducers

Description

Model LV16 mini-diameter submersible liquid level transducers is designed for applications which require a small diameter of the transducer body. This model employs BCM piezoresistvie pressure sensor and is protected by the stainless steel (SS) housing.

In the application, the transducer is submerged into the measuring liquid. By measuring the pressure generated by the liquid, the output of the LV16 is proportional to the level of the liquid.

The measuring range of LV16 transducers spans from 0~5 to 0~100 meter water column (mH_2O) with measuring accuracy of 0.5%fs (fs = full scale). The output signal is the millivolt signal directly from the Wheatstone bridge circuit which can be either with or without temperature compensation.

The temperature sensor can also be integrated into this model on request.

The pressure reference can be either gauge (or relative) pressure or absolute pressure. The gauge type features longer body than the absolute type does, because of the different stiffness of the cables attached to these two types.

Features

- miniaturized body diameter
- construction: all stainless steel housing, rigid and robust
- measuring ranges: 0~5mH2O, ..., 0~100mH2O
- accuracy: 0.5%fs

Dimensions

Gauge Type:

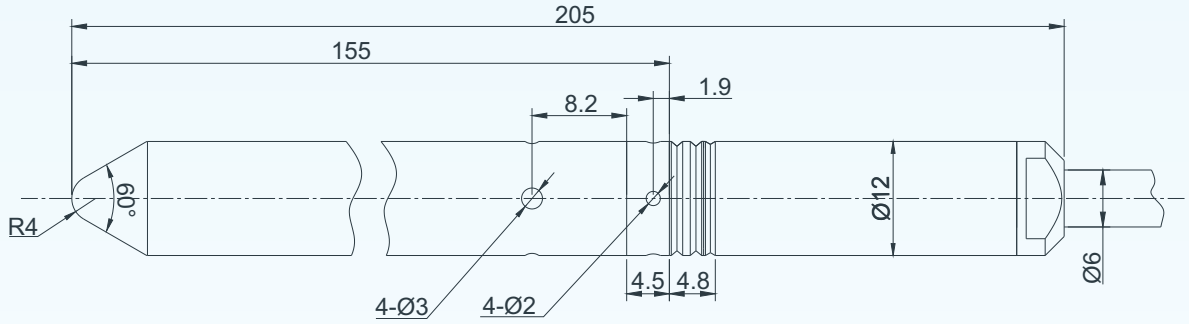

Absolute Type:

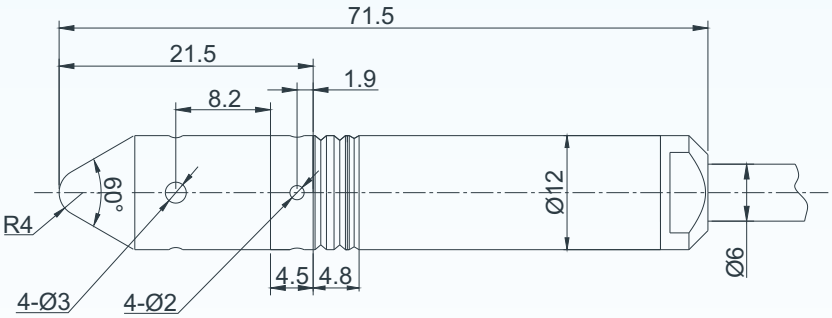

Note: All dimensions in mm.

BCM SENSOR TECHNOLOGIES BVBA

Industriepark Zone 4, Brechtsebaan 2
B-2900 Schoten - Antwerpen, BELGIUM

Tel.: +32-3-238 6469
Fax: +32-3-238 4171

website: www.bcmsensor.com
email: sales@bcmsensor.com

Model LV16
Mini-Diameter Submersible Liquid Level Transducers

BCM SENSOR

Technical Data

Parameters	Units	Specifications	Notes
pressure medium		viscous fluid or fluid with particles	1
measuring ranges	mH2O	0~5, ~10, ~25, ~50, ~100	2
pressure reference		gauge, absolute	
proof pressure	%fs	300	3
burst pressure	%fs	500	
output sensitivity	mV/V	⩾4.5	
excitation	Vdc	3, ..., 10	
zero offset	mV/V	⩽ ±0.4	
accuracy	%fs	±0.5	4
long-term stability	%fs/year	⩽ ±0.2	
input resistance	kΩ	12±4	
output resistance	kΩ	3±1	
insulation resistance	MΩ @100Vdc	100	
operating temperature range	°C	-30 ~ +60	
storage temperature range	°C	-30 ~ +60	
compensated temperature range	°C	7~17 (standard), 15~35	
temperature coefficient of zero offset	%fso/°C	⩽ ±0.05	
temperature coefficient of span	%fso/°C	⩽ ±0.1	
life time	cycles	10^8	
response time	ms	⩽ 10	5
pressure diaphragm		316L SS	
housing material		316 SS	
electrical connection		Φ6mm, 4-core shielded black PVC cable with a vent tube	6&7
		Φ5.2mm, 4-core shielded black PVC cable without a vent tube	6&7
temperature sensor		NTC (100kΩ, 0~70°C, 1% accuracy)	8
environment protection		IP68	
weight (without cable)	gram	~70 (for absolute version), ~190 (for gauge version)	

Notes:
1. The pressure medium should be compatible with wetted parts material and pressure diaphragm.
2. For customized ranges, consult BCM.
3. “fs” refers to full scale pressure or rated pressure.
4. Including non-linearity, hysteresis and repeatability.
5. Response time for a 0 bar to fs step change, 10% to 90% rise time.
6. The vent tube is provided in the cable if the pressure type is gauge (relative) pressure. The cable will not be equipped with the vent tube if the pressure type is absolute.
7. The core number will be 6 if the NTC temperature sensor is required.
8. Other temperature sensors are available on request.

The listed specifications and dimensions are subject to change without prior notice.

BCM SENSOR TECHNOLOGIES BVBA

Industriepark Zone 4, Brechtsebaan 2
B-2900 Schoten - Antwerpen, BELGIUM

Tel.: +32-3-238 6469
Fax: +32-3-238 4171

website: www.bcmsensor.com
email: sales@bcmsensor.com

Model LV16
Mini-Diameter Submersible Liquid Level Transducers

Ordering Information

position (pos.) 1: model

LV16

pos. 2: measuring ranges

5mH2O
10mH2O
25mH2O
50mH2O
100mH2O

pos. 3: pressure referene

G: gauge pressure (standard)
A: absolute pressure

pos. 4: output signal

4.5mV/V

pos. 5: accuracy

0.5%fs

pos. 6: compensation

T4 = 7~17°C (standard)
T5 = 15~35°C
NT = no temperature compensation

pos. 7: temperature sensor

WT = without temperature sensor (standard)
NTC = NTC temperature sensor

pos. 8: electrical interface

Φ6,4-core,shielded,blkPVC,vent,2m
= Φ6mm, 4-core shielded black PVC cable with a vent tube (for gauge pressure), 2m cable length (can be customized).

Φ5.2,4-core,shielded,blkPVC,2m
= Φ5.2mm, 4-core shielded black PVC cable without a vent tube (for absolute pressure), 2m cable length (can be customized).

pos. 9: customized specifications

"(*)" is necessary only if any customized parameter is required, otherwise it is neglectable.

pos.1	pos. 2	pos. 3	pos. 4	pos. 5	pos. 6	pos. 7	pos. 8	pos. 9

Example of Ordering Code

- standard products: LV16-10mH2O-G-4.5mV/V-0.5%fs-T4-WT-(Φ6,4-core,shielded,blkPVC,vent,12m)
  LV16-25mH2O-A-4.5mV/V-0.5%fs-NT-NTC-(Φ5.2,6-core,shielded,blkPVC,26m)

- customized products: LV16-5mDiesel[850kg/m^3]-G-4.5mV/V-0.5%fs-T4-WT-(Φ6,4-core,shielded,blkPUR,vent,6m)-(*)
  (*): Customized pressure medium for calibration.
  Customized cable jacket material.

BCM SENSOR TECHNOLOGIES BVBA

Industriepark Zone 4, Brechtsebaan 2
B-2900 Schoten - Antwerpen, BELGIUM

Tel.: +32-3-238 6469
Fax: +32-3-238 4171

website: www.bcmsensor.com
email: sales@bcmsensor.com