ITOH DENKI

TECHNOLOGY FOR TOMORROW ®

PM605XE SERIE

TECHNICAL DOCUMENTATION

POWER MOLLER®

SUMMARY

1 - Presentation of the PowerMoller product range — Page 3

2 - Presentation of the series — Page 4
- General characteristics
- Structure and description
- Applications

3 - Transfer capacity — Page 7
- Ribbed belt drive

4 - Technical datas according to speed code — Page 8

5 - Presentation of the different fixing options — Page 11

6 - Dimensional characteristics — Page 13
- Roller with pulley for ribbed belt - Hexagonal spring loaded shaft on free end
- Roller with pulley for ribbed belt- M8 female threaded shaft with screw on free end
- Roller without drive - Hexagonal spring loaded shaft on free end
- Roller without drive - M8 female threaded shaft with screw on free end

7 - Dimensional characteristics - miscellaneous — Page 17
- Coated in natural rubber, nitrile rubber and polyurethane
- Cylindrical-conical machining

8 - Mounted on the frames — Page 18
- Mounting plate for smooth 11.1 mm hexagonal shaft - Flat on top
- Mounting plate for smooth 11.1 mm hexagonal shaft - Spike on top
- Mounting plate for threaded hexagonal shaft - Flat on top
- Mounting plate for threaded hexagonal shaft - Spike on top
- M8 threaded fixed shaft

9 - Wiring and commands — Page 20
- Wiring
- Inerface scheme
- Pin 1 and 3 - 24VDC power supply
- Pin 2 - Rotation direction
- Pin 4 - Start / Stop
- Pin 5 - Speed variation

10 - Accessories — Page 22
- Ribbed belts
- Extension cables
- Speed adaptor
- 24VDC power supply

11 - Product identification — Page 24
- Round label
- Square label

Annex 1 — Page 25

1 - Presentation of the Power Moller® product range

POWER MOLLER® solutions

Controls

- **Standard circuit board**
  - CB016 | CB016B
  - CBM-105
  - CBK-109 | CBK-109B — *Replacing CB030*
  - CB018
  - CBV-108
- **ZPA circuit board**
  - HB510 | HB510B
  - HBK-608
  - HBV-609
- **Module circuit board**
  - HBR-605
  - CBR-306
  - HBM-201
- **Network controller**
  - IB-E
  - IB-P

Motorized rollers

- **DC Brushless**
  - **External circuit board**
    - **Ø50**
      - PM500 FE (KG 300) — CBM-105, HB510, IB-E
      - PM500 VE (KG 300) — CBV-108, HBV-609, IB-P
      - PM500 FE-B (KG 300) — CB016B, HB510B
    - **Ø60,5**
      - PM605 FE (KG 500) — CBM-105, HB510, IB-E
      - PM605 VE (KG 500) — CBV-108, HBV-609, IB-P
      - PM605 FE-B (KG 500) — CB016B, HB510B
      - PM605 KT (KG 1000) — CBK-109, HBK-608, IB-P, IB-E
      - PM605 KT-B (KG 1000) — CBK-109B
    - **Ø32**
      - PM320 HS (KG 10) — CB018
  - **Integrated circuit board**
    - **Ø50**
      - PM500 XE (KG 300) — B&W AS-i 5.0, Wenglor
      - PM500 XP (KG 300) — B&W AS-i 5.0, Wenglor
      - PM500 XK (KG 300) — PEPPERL-FUCHS, AS-Interface, B&W AS-i 5.0
      - PM500 XC (KG 300) — PEPPERL-FUCHS, AS-Interface, B&W AS-i 5.0
    - **Ø60,5**
      - PM605 XE (KG 500) — B&W AS-i 5.0, Wenglor
      - PM605 XP (KG 500) — B&W AS-i 5.0, Wenglor

Modules

- **90° transfer**
  - F-RAT-S250 — HBR-605, CBM-105, CBR-306
  - F-RAT-S300 — HBR-605, CBM-105, CBR-306
  - F-RAT-NX75 — CBK-109, CB016B, HBM-201, IB-E, IB-P
  - MRAT — CBK-109, CBM-105, IB-E, IB-P
- **45° transfer**
  - POP-UP — CBM-105, CBR-306
  - POP-UP VE — IB-P05F-P-UL, IB-P01FP-UL, CBV-108FP-LF1, CBV-108FP, CBV-108FP-LF1
- **30° / 45° / 90° transfer**
  - MABS — IB-E06F-M1

Corresponding circuit board | Compatible module / sensor | Max load to be conveyed (KG 500) | Mechanical brake version

2 - Presentation of the series

The brushless motorized roller PM605XE has the circuit board and gear-motor integrated within the roller allowing a good tightness, easy wiring with M8-5pins connector and space saving.
It can be easily controlled by: PLC, Asi-Bus via Bihl & Wiedemann module, or logic sensors with integrated ZPA from Wenglor, etc. It is designed for conveyor lines of light and medium loads (up to 500Kg max), in order preparation, in distribution, and for assembly lines. The motorized roller PM605XE is the ideal solution to answer to the difficulties coming from the working environment (liquid, dust, ...).

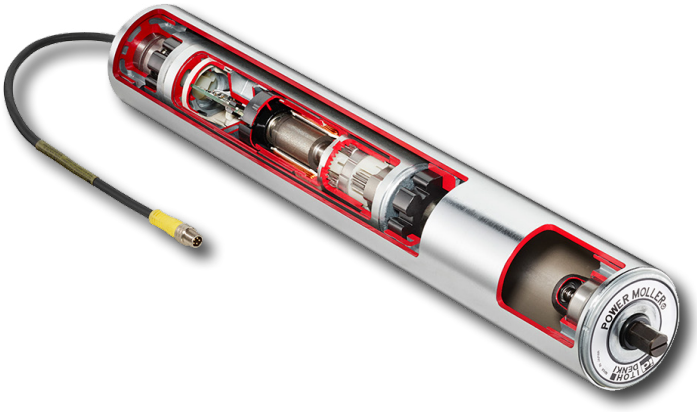

General characteristics

ELECTROMECHANICAL	Direct current and brushless 24 VDC		24 VDC (+ /- 10 %) – ripple ratio < 10 %		
	Insulation class / Rated Ambient (UL Certified)		A / 40°C		
	Rated current (UL Certified)		1.7 A		
	Operation at 25°C	Continuous	100%		
		Intermittent	1440 starts / hour maxi Minimum duty cycle= 1 s ON / 1,5 s OFF ED = ON / (ON+OFF) ≤ 40 %		
	Brake		Dynamic braking		
	Protection index		IP54 (IP65, contact us))		
	Cable length		300 mm with M8 connector – 5 pins		
	Protection		Against overload by integrated thermistor Against polarity reversal 0-24VDC (integrated LED) Current limitation within the circuit board Integrated fuse 5A Thermal proctection (>95°C for the circuit board) Protection against under supply Protection against induced voltage		
	Environment		0 / 40 °C - no condensation - or corrosive or explosive atmosphere Vibrations < 0,5 G		
	Sound level		≈ 54 dB nominal 1 metre away		
	Speed code (m/min)		17	30	60
	Reduction ratio		1/44,97	1/26,67	1/12,65
CONTROL	Circuit board functions		Start / Stop (input current 7,3 mA to 24V) Inversion of transfer direction (input current 7,3 mA à 24V) Constant torque speed variation Speed variation by injection of external voltage 0-10VDC or by fixed resistor.		

MECHANICAL

Shaft and flange motor side :	Plain hexagonal Threaded hexagonal	• Plain hexagonal 11.1 mm shaft or M12 threaded • Heat-treated and phosphated steel shaft • Zamac (zinc, aluminium and magnesium alloy) endcaps
Shaft and flange free side :	Hexagonal spring loaded Set screw	• Smooth hexagonal 11.1mm shaft with spring or fixed Ø 15mm x 7mm, 12 mm M8 threaded flat metal strip • Heat-treated and phosphated steel shaft • Zamac (zinc, aluminium and magnesium alloy) flange
Tube :	Zinc plated steel Stainless steel	• Tube in precision cold drawn steel, ST37-2 quality, outer diam. 60,5mm • Zinc-coated or stainless steel (304L)
Pulleys :	Ribbed screw Spring screw	Pulleys for : • Ribbed belts,8 teeth, Zamac (zinc, aluminium and magnesium alloy) • Hexagonal shaft with spring or M8 threaded shaft
Lagging :	Polyurethane Natural rubber / nitrile	• Polymerized polyurethane coating, thickness 4,75mm, 90ShA, grey (Ø finished outside 70mm) • Natural hot vulcanized rubber coating, thickness 4,75mm, 60~65 ShA (Ø finished outside de 70mm)

Structure and description

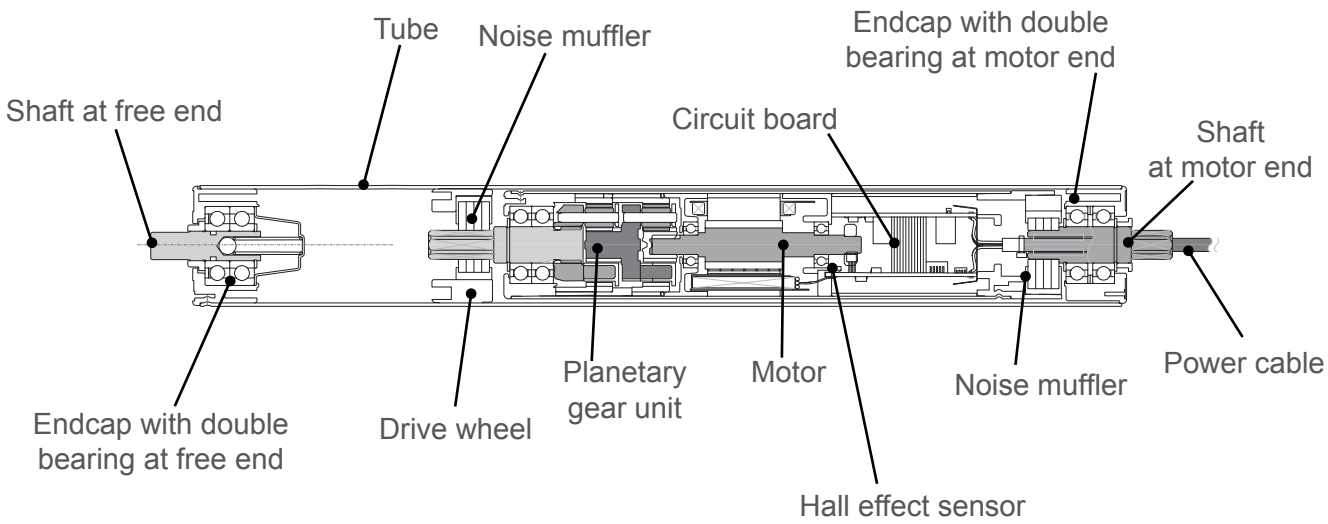

Applications

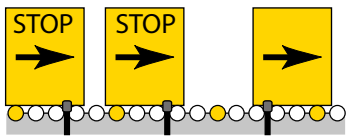

Zero pressure accumulation (ZPA)

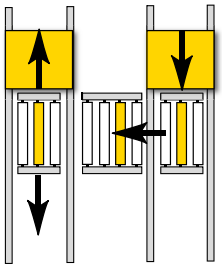

90° transfer

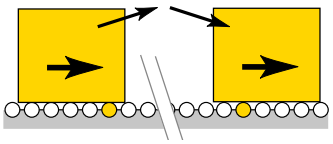

Acceleration / Deceleration

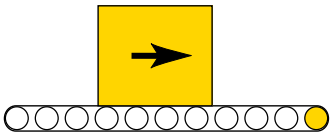

Belt conveyor

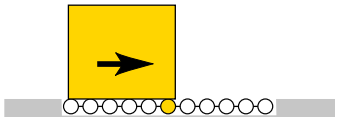

Floor conveyor

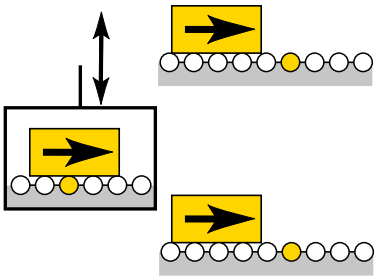

Lift

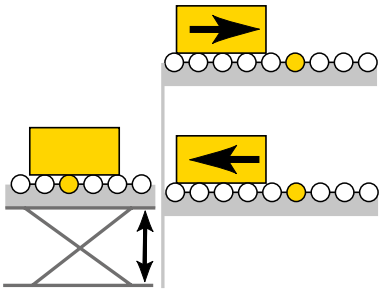

Lift table

3 - Transfer capacity

Driven by ribbed belts

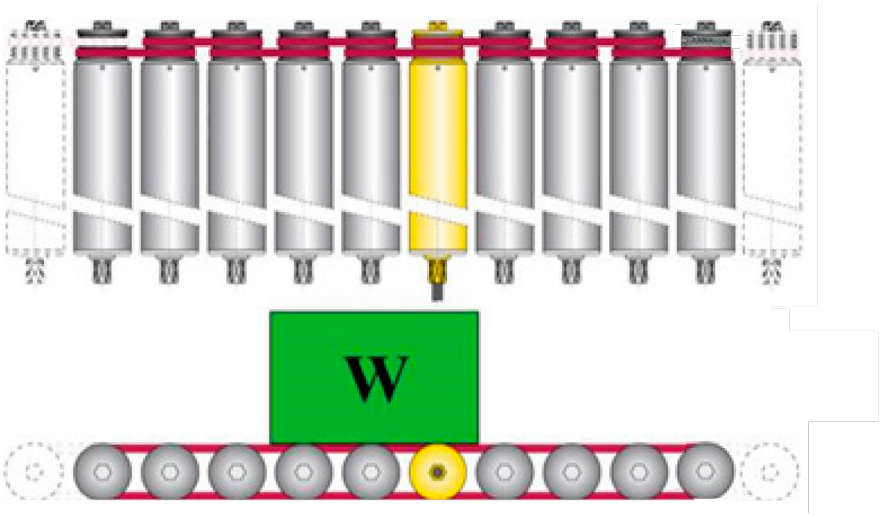

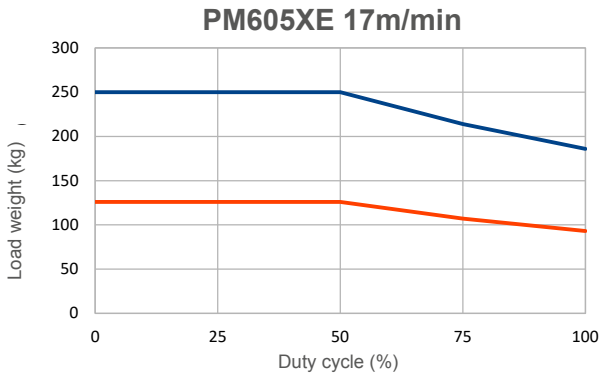

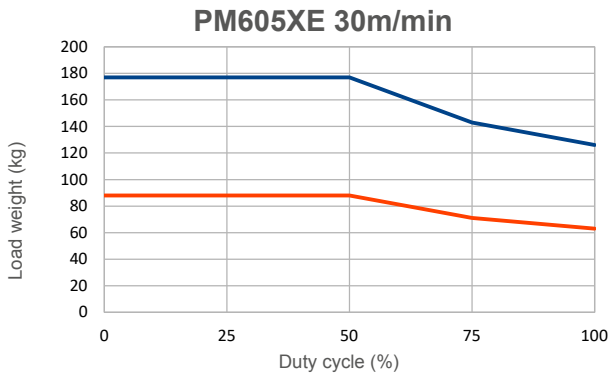

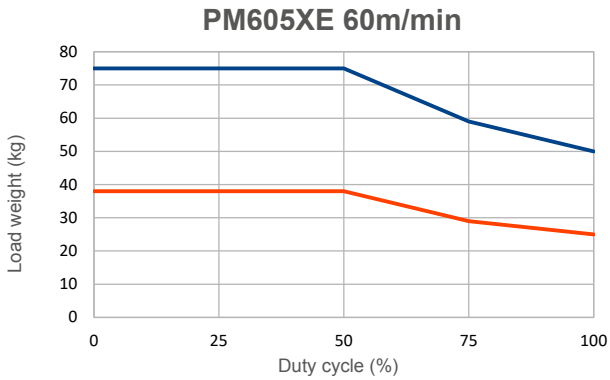

- Load to transport
  - Plastic box (μ = 0,03)
  - Cardboard box (μ = 0,06)
- 9 slave rollers driven by 1 motorized roller
- Ambient temperature of 30 ° C

These curves are given as a guide. Transfer capacity depends on the nature and quality of the transported load, the belt tension, the quality of the bearings, the nature of the sleeves, the ambient temperature...

4 - Technical datas according to speed code

Speed code 17

V (m/min)	Speed selection		Tangential force (N)		Torque (Nm)		Current(A)			Rated Output (W)	Rated Input (W)
No load	By resistor (Ω)	Via external voltage (V)	Nominal	Starting	Nominal	Starting	No load	Nominal	Starting		
21,0	≥ 9,1K	9,65 ± 0,35	57,8	218,7	1,75	6,62	0,5	1,7	2,0	31	42
19,3	6,2K	8,5 ± 0,2	62,8		1,90		0,5	1,7		30	42
15,8	4,3K	7,5 ± 0,2	75,4		2,28		0,4	1,7		30	42
14,0	3,3K	6,5 ± 0,2	80,4		2,43		0,4	1,7		28	41
12,3	2,2K	5,5 ± 0,2	88,0		2,66		0,3	1,7		27	40
10,5	1,8K	4,5 ± 0,2	93,0		2,81		0,3	1,6		23	36
8,5	1,2K	3,5 ± 0,2	100,6		3,04		0,3	1,5		17	30
7,0	0,75K	2,5 ± 0,2	108,1		3,27		0,3	1,5		17	30
5,2	0,43K	1,5 ± 0,2	115,6		3,50		0,2	1,3		14	29
3,5	≤ 0,12K	0,45 ± 0,45	120,7		3,65		0,2	1,2		10	26

Ambient temperature at 25°C

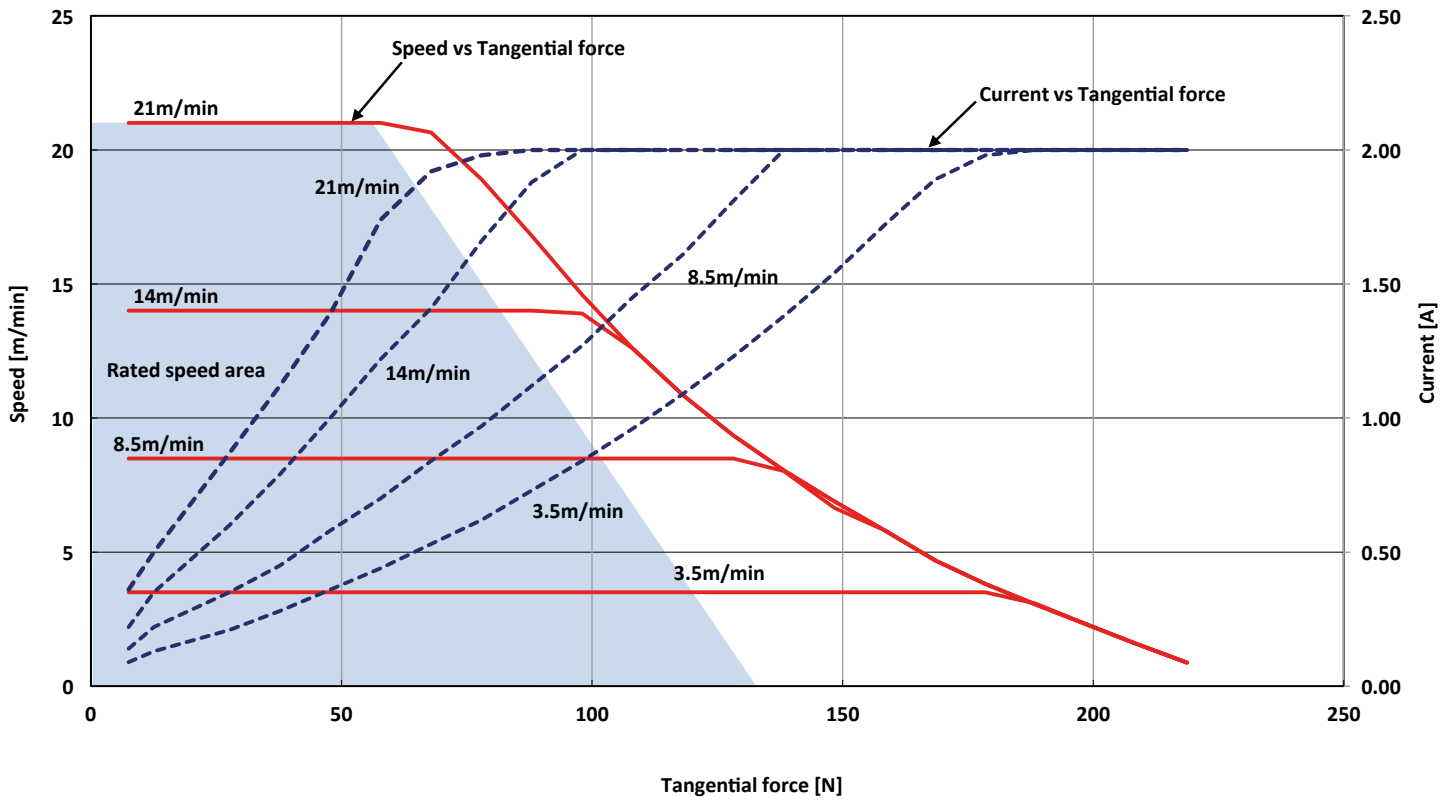

Speed code 30

V (m/min)	Speed selection		Tangential force (N)		Torque (Nm)		Current(A)			Rated Output (W)	Rated Input (W)
No load	By resistor (Ω)	Via external voltage (V)	Nominal	Starting	Nominal	Starting	No load	Nominal	Starting		
35,4	≥ 9,1K	9,65 ± 0,35	39,0	147,4	1,18	4,46	0,5	1,7	2,0	31	42
32,5	6,2K	8,5 ± 0,2	42,4		1,28		0,5	1,7		30	42
26,6	4,3K	7,5 ± 0,2	50,8		1,54		0,4	1,7		30	42
23,6	3,3K	6,5 ± 0,2	54,2		1,64		0,4	1,7		28	41
20,7	2,2K	5,5 ± 0,2	59,3		1,79		0,3	1,7		27	40
17,7	1,8K	4,5 ± 0,2	62,7		1,90		0,3	1,6		23	36
14,3	1,2K	3,5 ± 0,2	67,8		2,05		0,3	1,5		17	30
11,8	0,75K	2,5 ± 0,2	72,9		2,20		0,3	1,5		17	30
8,9	0,43K	1,5 ± 0,2	77,9		2,36		0,2	1,3		14	29
5,9	≤ 0,12K	0,45 ± 0,45	81,3		2,46		0,2	1,2		10	26

Ambient temperature at 25°C

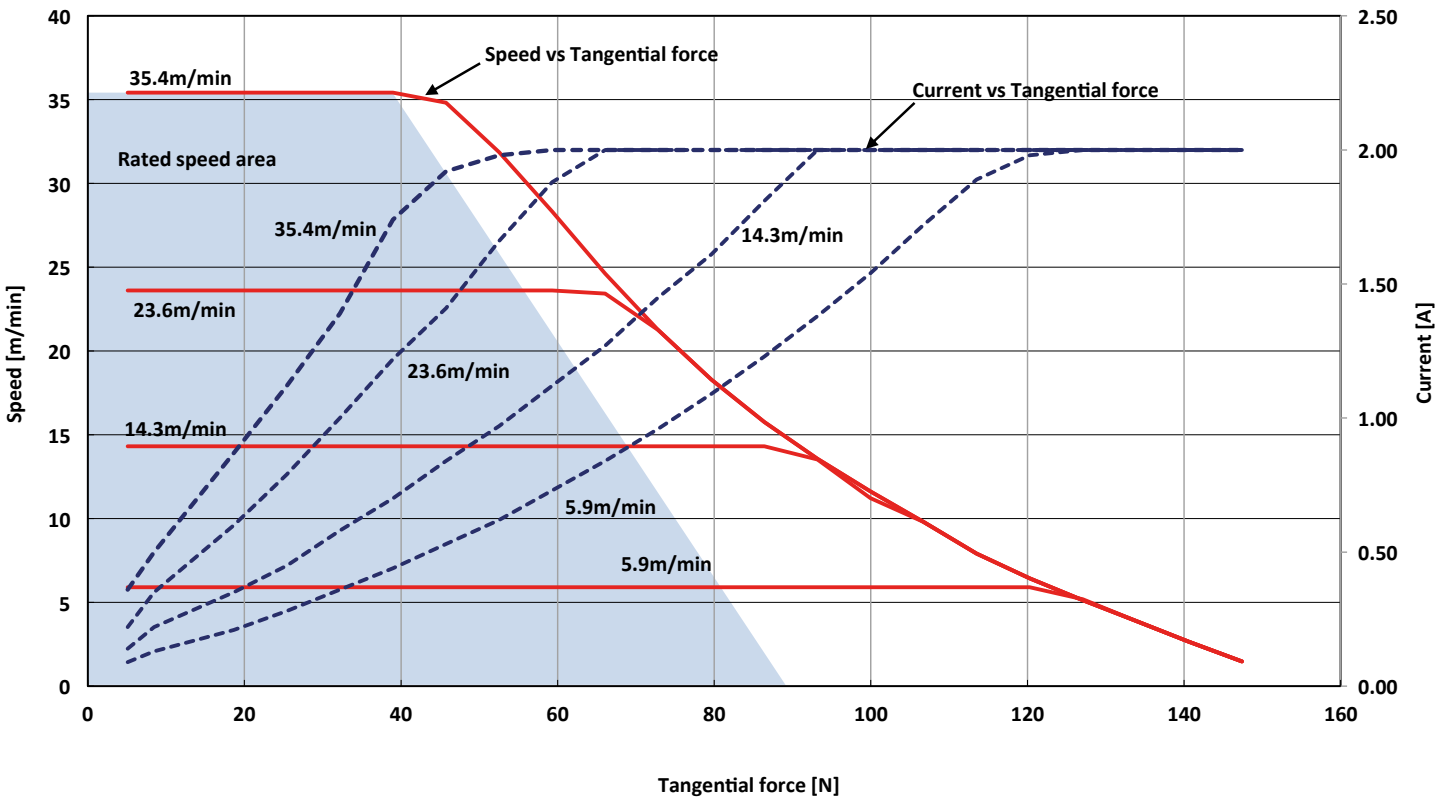

Speed code 60

V (m/min)	Speed selection		Tangential force (N)		Torque (Nm)		Current(A)			Rated Output (W)	Rated Input (W)
No load	By resistor (Ω)	Via external voltage (V)	Nominal	Starting	Nominal	Starting	No load	Nominal	Starting		
74,7	≥ 9,1K	9,65 ± 0,35	18,5	69,9	0,56	2,11	0,5	1,7	2,0	31	42
68,5	6,2K	8,5 ± 0,2	20,1		0,61		0,5	1,7		30	42
56,0	4,3K	7,5 ± 0,2	24,1		0,73		0,4	1,7		30	42
49,8	3,3K	6,5 ± 0,2	25,7		0,78		0,4	1,7		28	41
43,6	2,2K	5,5 ± 0,2	28,1		0,85		0,3	1,7		27	40
37,3	1,8K	4,5 ± 0,2	29,7		0,90		0,3	1,6		23	36
30,2	1,2K	3,5 ± 0,2	32,1		0,97		0,3	1,5		17	30
24,9	0,75K	2,5 ± 0,2	34,5		1,04		0,3	1,5		17	30
18,7	0,43K	1,5 ± 0,2	37,0		1,12		0,2	1,3		14	29
12,4	≤ 0,12K	0,45 ± 0,45	38,6		1,17		0,2	1,2		10	26

Ambient temperature at 25°C

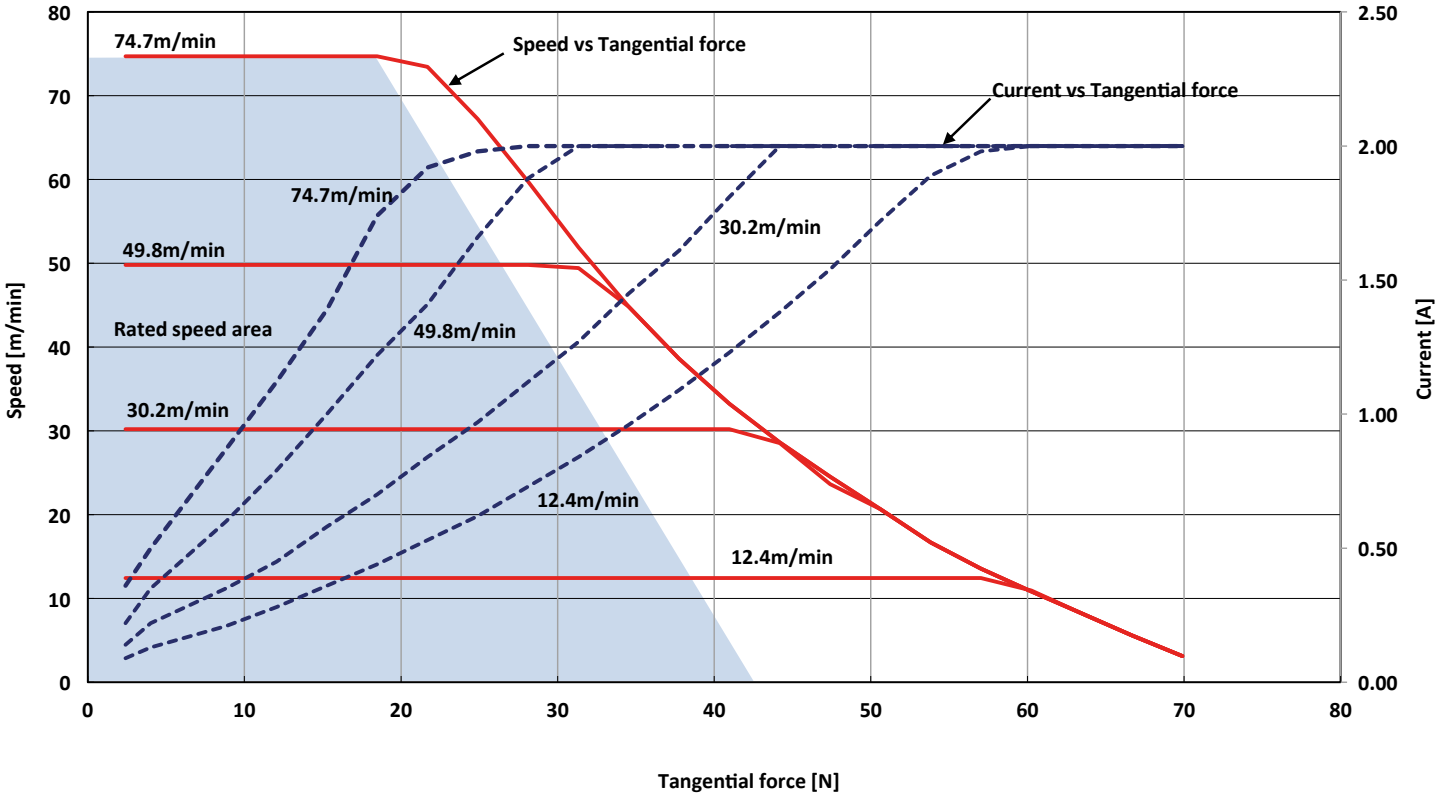

5 - Presentation of the different fixing options

Free side fixing		Motor side fixing	
Ref : A-071-G / A-081-G *(optional)*		M12 P1,25	**Ref : AM-FE-F / AM-FE-A** *(obligatory)*
Srew M8 x 14 **Ref : SP-M8-14** *(obligatory)*		M12 P1,25	**Ref : AM-FE-F / AM-FE-A** *(obligatory)*
			Ref : A-071-G / A-081-G *(obligatory)*
Ref : A-071-G / A-081-G *(optional)*			**Ref : A-071-G / A-081-G** *(obligatory)*
Ref : C-071 / C-081 *(optional)*		M12 P1,25	**Ref : AM-FE-F / AM-FE-A** *(obligatory)*
Srew M8 x 14 **Ref : SP-M8-14** *(obligatory)*		M12 P1,25	**Ref : AM-FE-F / AM-FE-A** *(obligatory)*
			Ref : C-071 / C-081 *(optional)*
Ref : C-071 / C-081 *(optional)*			**Ref : C-071 / C-081** *(optional)*

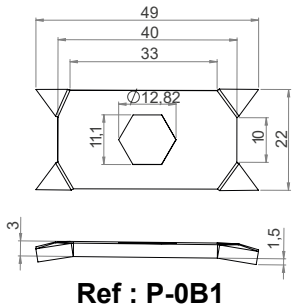

Ref : P-0B1

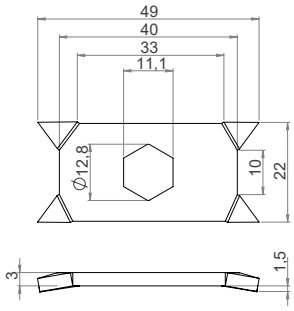

Ref : P-0C1

Ref : FEY02

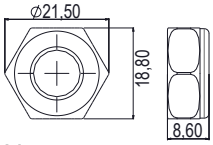

Note :
Nut ref. FEY02 should be used with the claw plate ref. P-0B1 or P-0C1.

P-0B1 + FEY02
P-0C1 + FEY02

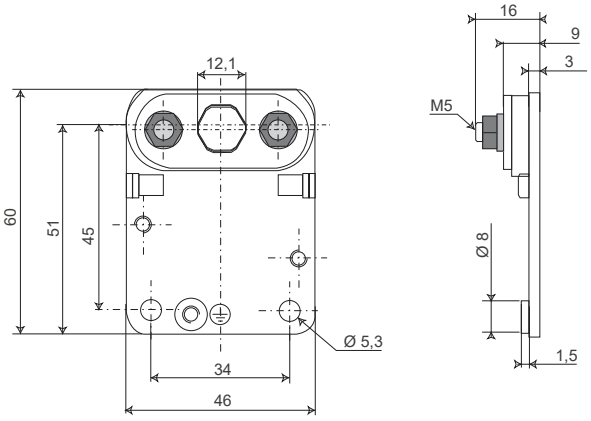

Ref : A-071-G

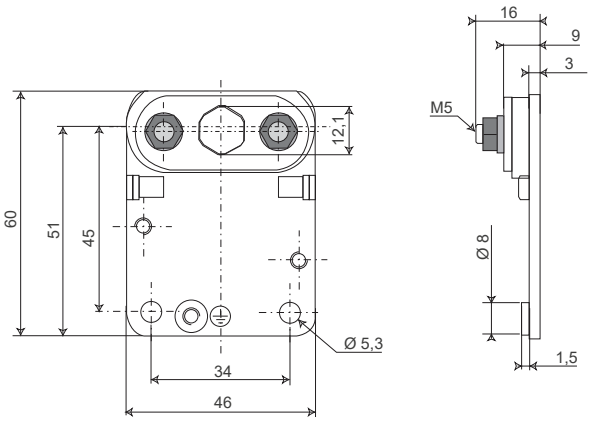

Ref : A-081-G

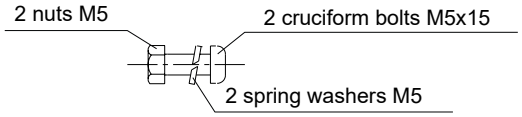

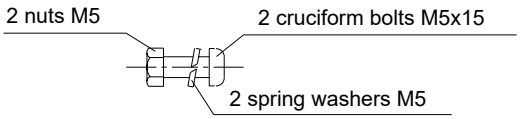

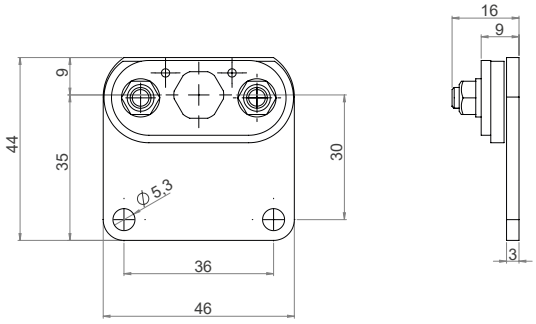

Ref : C-071

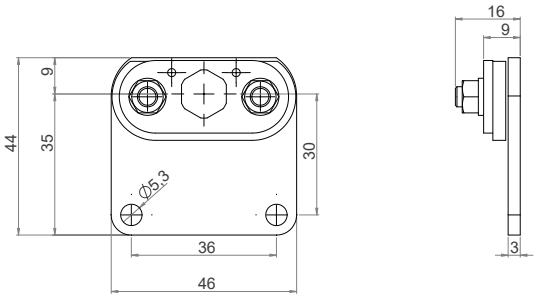

Ref : C-081

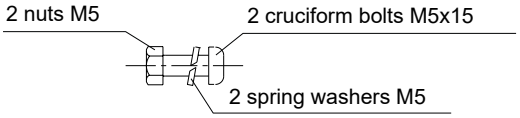

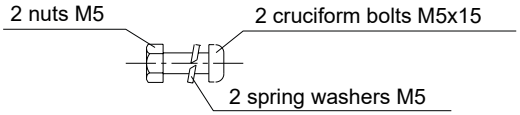

6 - Dimensional characteristics

Roller with pulley for ribbed belt

PM605XE - Hexagonal threaded shaft motor side and hexagonal spring loaded shaft on free end

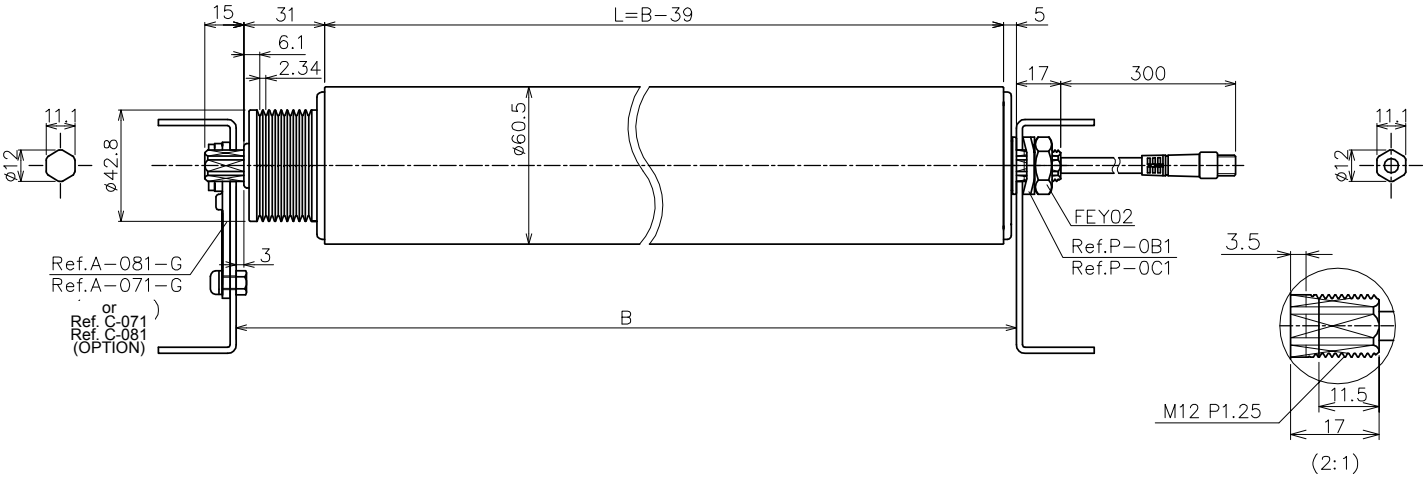

PM605XE - Hexagonal plain shaft motor side and hexagonal shaft with spring on free end

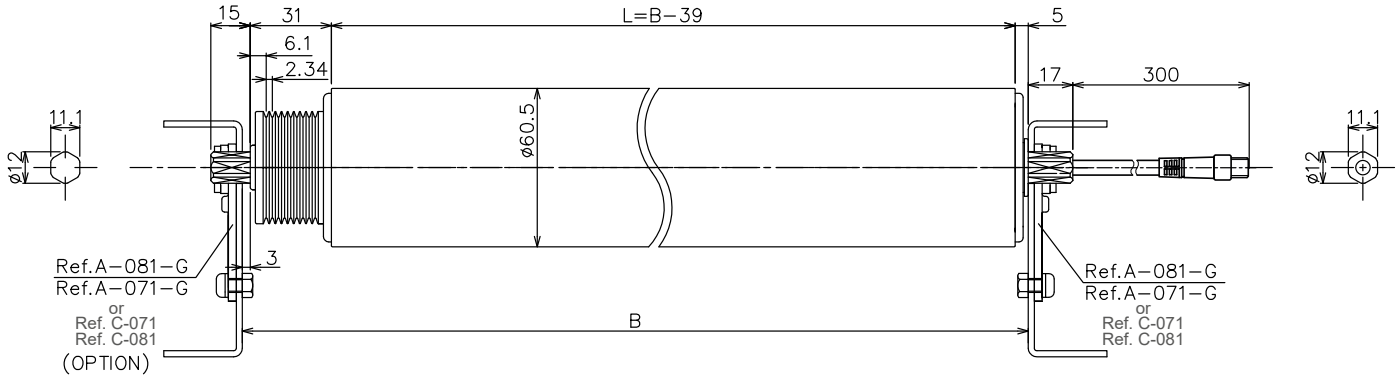

Dimensions PM605XE

Speed code	Dimension (B) mini ≤ B ≤ max	Tube length (L) mini ≤ L ≤ max
17	389 ≤ B ≤ 1539	350 ≤ L ≤ 1500
30	369 ≤ B ≤ 1539	330 ≤ L ≤ 1500
60	369 ≤ B ≤ 1539	330 ≤ L ≤ 1500

Weight / Static load / Axial force

Tube length		350	400	500	600	700	800	900	1000	1100	1200
Weight (Kg)	17m/min	3,8	4,0	4,4	4,8	5,2	5,6	6,0	6,4	6,8	7,2
	30 m/min	3,6	3,8	4,2	4,6	5,0	5,4	5,8	6,2	6,6	7,0
	60 m/min	3,6	3,8	4,2	4,6	5,0	5,4	5,8	6,2	6,6	7,0
Static load		160	160	130	130	100	100	80	80	70	70
Axial force max (N)		490									

Roller with pulley for ribbed belt

PM605XE - Hexagonal threaded shaft motor side and M8 female threaded shaft with screw on free end

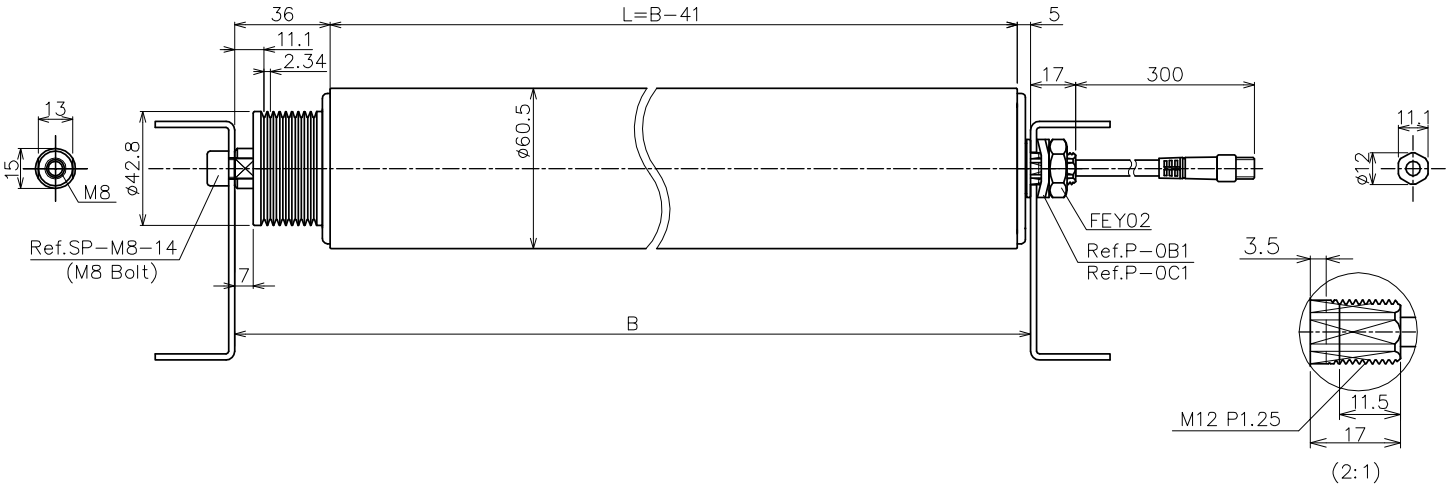

PM605XE - Hexagonal plain shaft motor side and M8 threaded shaft with screw on free end

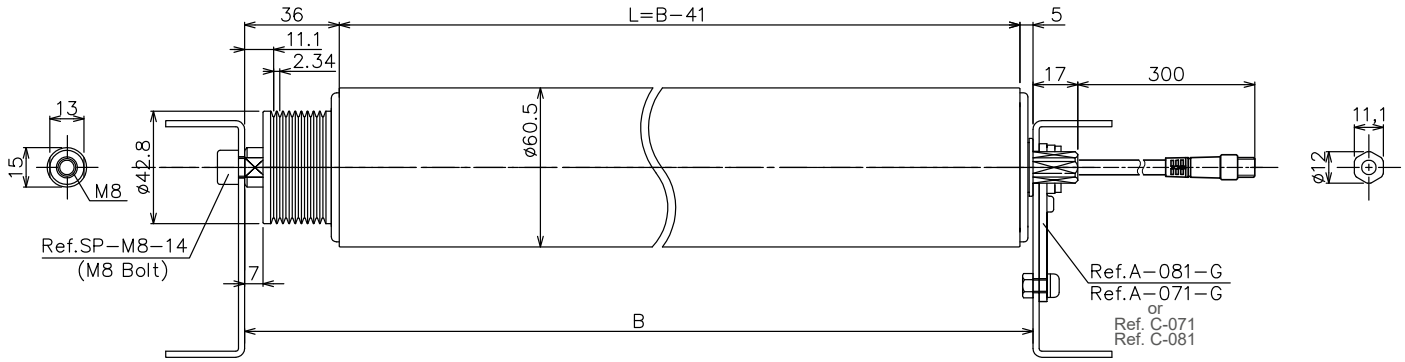

Dimensions PM605XE

Speed code	Dimension (B) mini ≤ B ≤ max	Tube length (L) mini ≤ L ≤ max
17	391 ≤ B ≤ 1541	350 ≤ L ≤ 1500
30	371 ≤ B ≤ 1541	330 ≤ L ≤ 1500
60	371 ≤ B ≤ 1541	330 ≤ L ≤ 1500

Weight / Static load / Axial force

Tube length		300	400	500	600	700	800	900	1000	1100	1200
Weight (Kg)	17m/min	4,0	4,2	4,6	5,0	5,4	5,8	6,2	6,6	7,0	7,4
	30 m/min	3,8	4,0	4,4	4,8	5,2	5,6	6,0	6,4	6,8	7,2
	60 m/min	3,8	4,0	4,4	4,8	5,2	5,6	6,0	6,4	6,8	7,2
Static load		160	160	130	130	100	100	80	80	70	70
Axial force max (N)		490									

Roller without drive

PM605XE - Hexagonal threaded shaft motor side and hexagonal spring loaded shaft on free end

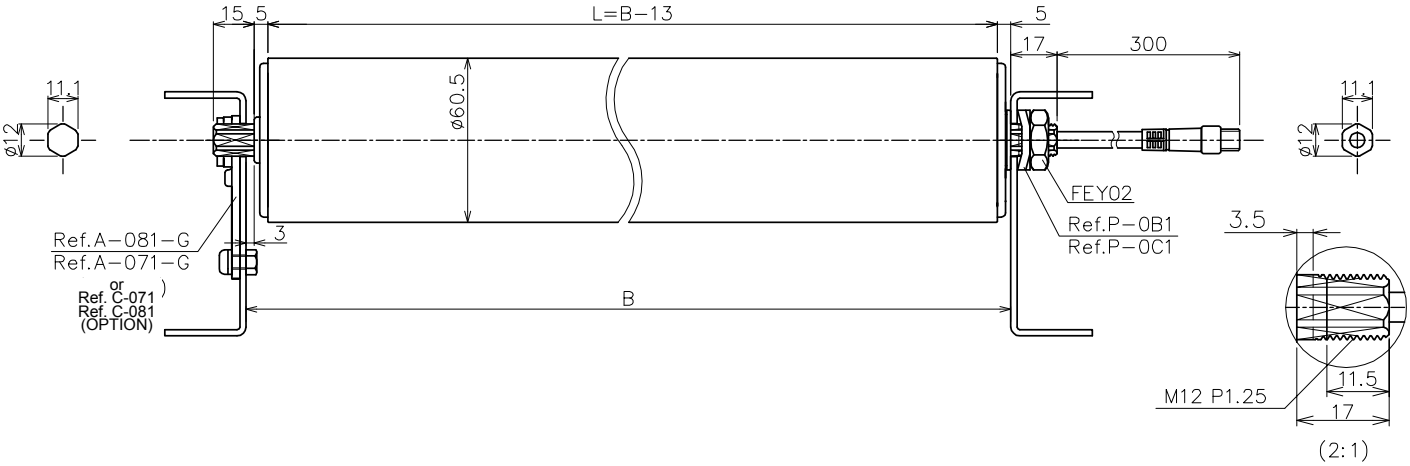

PM605XE - Hexagonal plain shaft motor side and hexagonal shaft with spring on free end

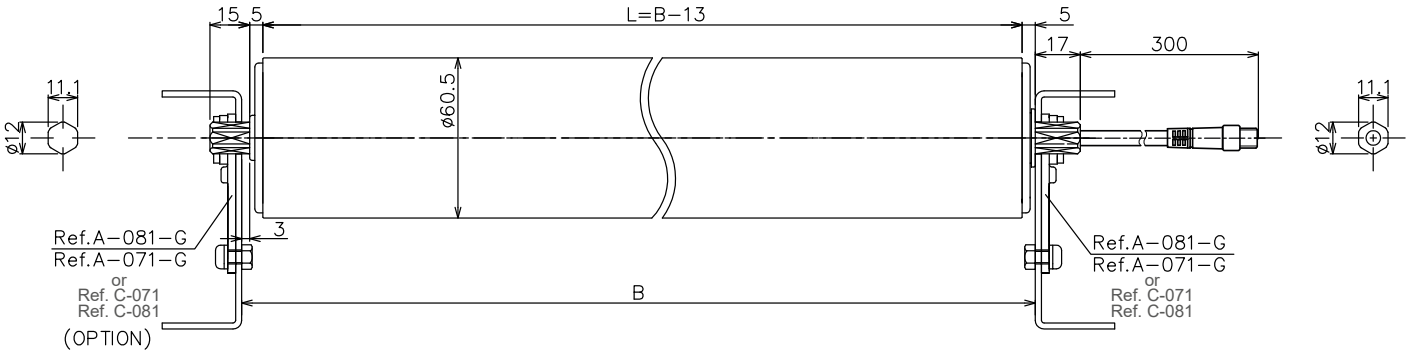

Dimensions PM605XE

Speed code	Dimension (B) mini ≤ B ≤ max	Tube length (L) mini ≤ L ≤ max
17	363 ≤ B ≤ 1513	350 ≤ L ≤ 1500
30	343 ≤ B ≤ 1513	330 ≤ L ≤ 1500
60	343 ≤ B ≤ 1513	330 ≤ L ≤ 1500

Weight / Static load / Axial force

Tube length		400	500	600	700	800	900	1000	1100	1200
Weight (Kg)	17m/min	4,0	4,4	4,8	5,2	5,6	6,0	6,4	6,8	7,2
	30 m/min	3,8	4,2	4,6	5,0	5,4	5,8	6,2	6,6	7,0
	60 m/min	3,8	4,2	4,6	5,0	5,4	5,8	6,2	6,6	7,0
Static load		160	130	130	100	100	80	80	70	70
Axial force max (N)		490								

Roller without drive

PM605XE - Hexagonal threaded shaft motor side and M8 female threaded shaft with screw on free end

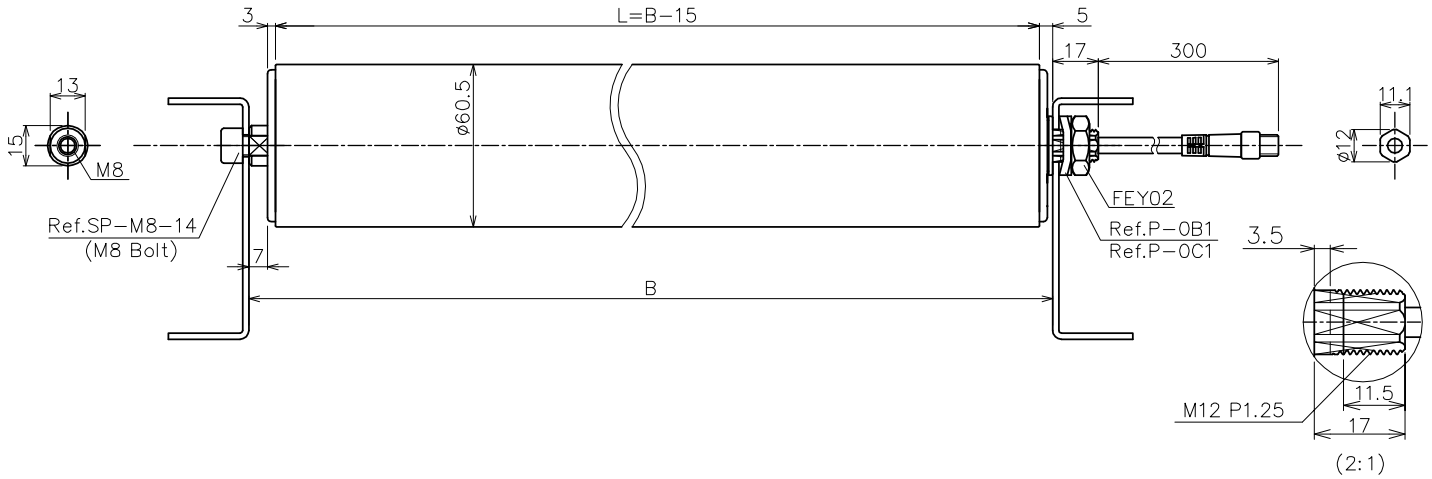

PM605XE - Hexagonal plain shaft motor side and M8 threaded shaft with screw on free end

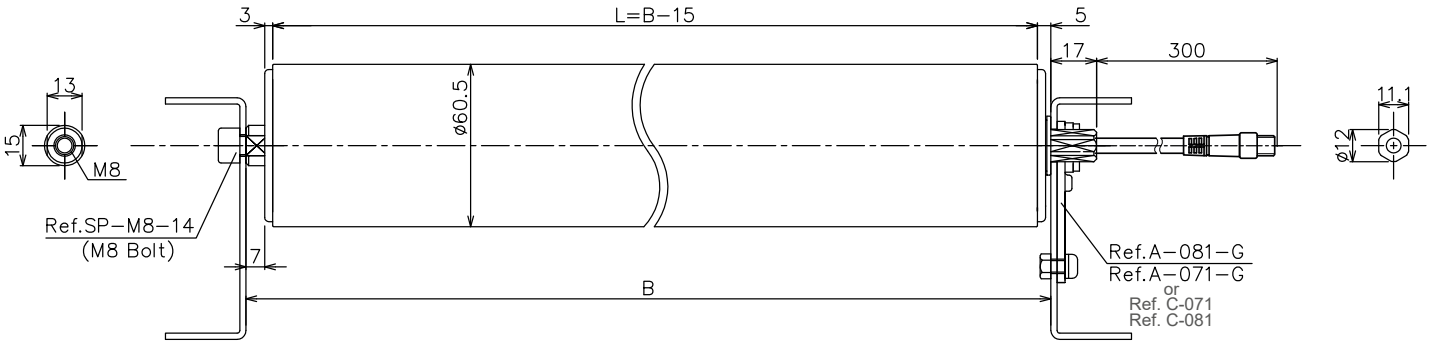

Dimensions PM605XE

Speed code	Dimension (B) mini ≤ B ≤ max	Tube length (L) mini ≤ L ≤ max
17	365 ≤ B ≤ 1513	350 ≤ L ≤ 1500
30	345 ≤ B ≤ 1513	330 ≤ L ≤ 1500
60	345 ≤ B ≤ 1513	330 ≤ L ≤ 1500

Weight / Static load / Axial force

Tube length		400	500	600	700	800	900	1000	1100	1200
Weight (Kg)	17m/min	4,3	4,7	5,1	5,5	5,9	6,3	6,7	7,1	7,5
	30 m/min	4,1	4,5	4,9	5,3	5,7	6,1	6,5	6,9	7,3
	60 m/min	4,1	4,5	4,9	5,3	5,7	6,1	6,5	6,9	7,3
Static load		160	130	130	100	100	80	80	70	70
Axial force max (N)		490								

7 - Dimensional characteritics - miscellaneous

Coated in natural rubber, nitrile rubber and polyurethane

Material	Characteritics	Hardness (ShA)	Thickness (mm)
Natural rubber	It improves the adherence of the products conveyed and reduces noise. Do not use in contact with hydrocarbon, oil or grease.	60~65	3
Nitrile rubber	Exceptional resistance in the presence of hydrocarbon, oil and grease.		
Polyurethane	High resistance to abrasion, tearing and oil.	90	

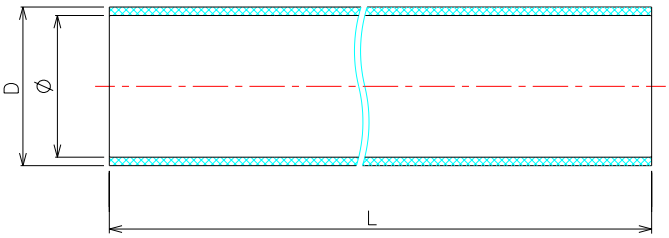

Cylindrical tube

L (mm)	Ø (mm)	D (mm)
≤1500	60,5	70

Crowned machining

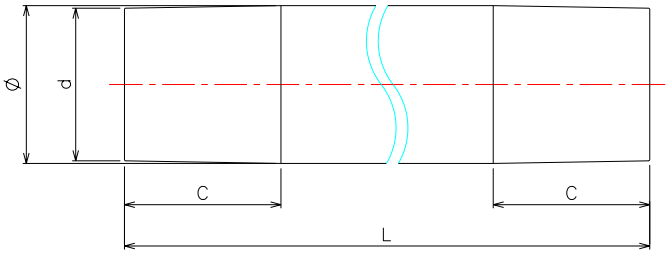

Tube in zinc-coated or stainless steel

L (mm)	C (mm)	Ø (mm)	d (mm)
≤600	60	60,5	58,5
601≤800	120		
≥800	120		

8 - Mounting on the frames

Mounting plate for plain 11.1 mm hexagonal shaft - FLAT ON TOP

Conveyor with hole Ø12,3mm 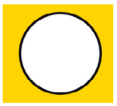 or hexagonal 11,2mm

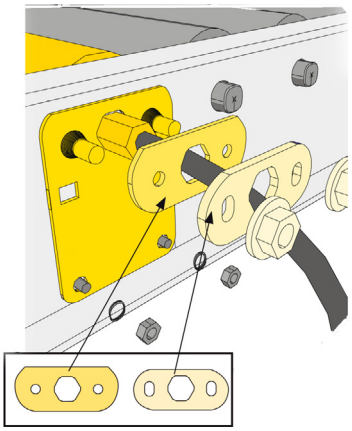

	Plate
Reference	A-071-G

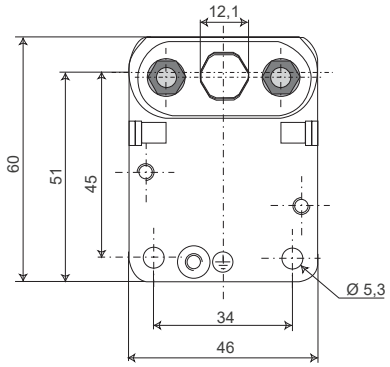

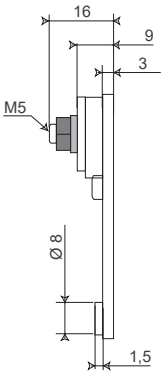

	Plate
Reference	C-071

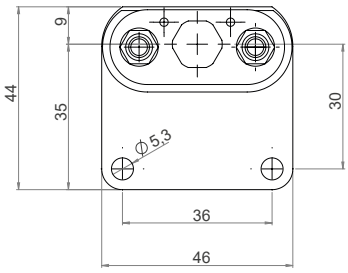

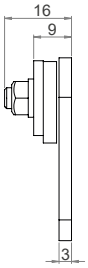

Mounting plate for plain 11.1 mm hexagonal shaft - ANGLE ON TOP

Conveyor with hole Ø12,3mm 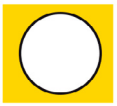 or hexagonal 11,2mm

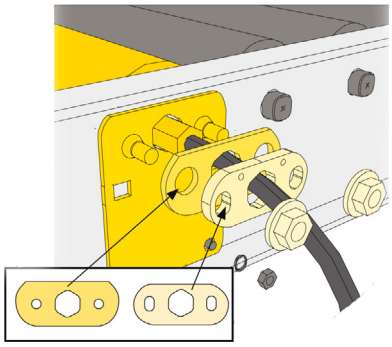

	Plate
Reference	A-081-G

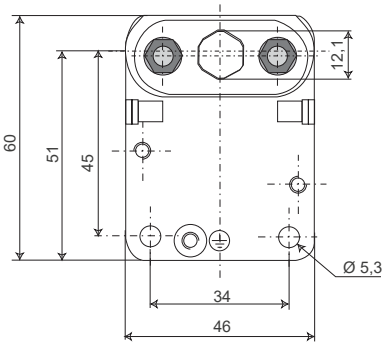

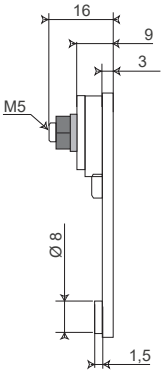

	Plate
Reference	C-081

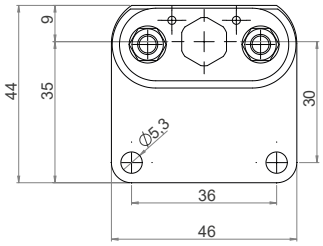

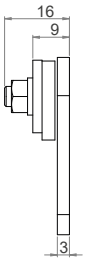

Mouting plate for threaded hexagonal shaft - FLAT ON TOP

Conveyor with hole Ø12,3mm 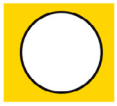 or hexagonal 11,2mm

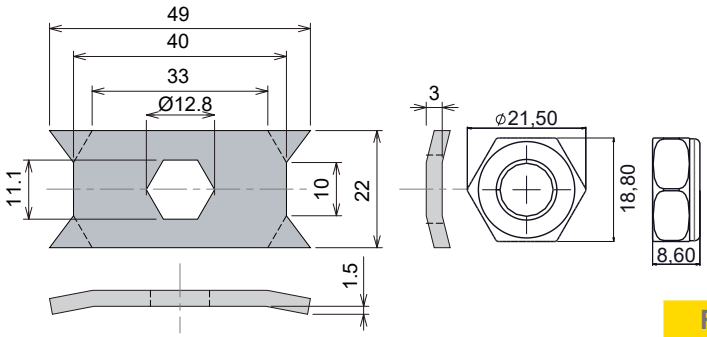

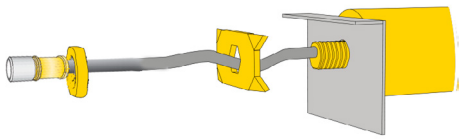

Tightening torque : 30 Nm ±10%

Reference	Claw plate	Washer	Nut
AM-FE-F	P-0B1	FSY02	FEY-02

Mouting plate for threaded hexagonal shaft - ANGLE ON TOP

Conveyor with hole Ø12,3mm 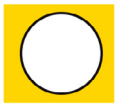 or hexagonal 11,2mm

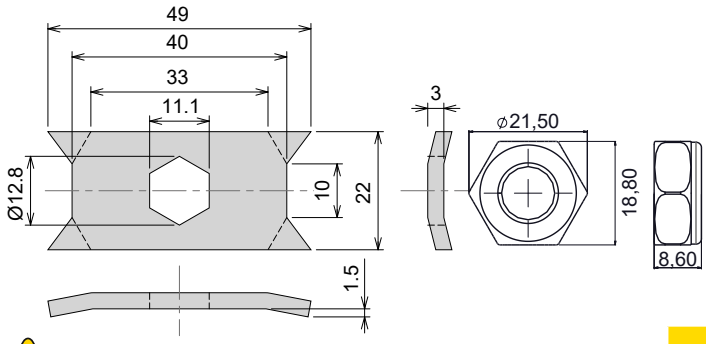

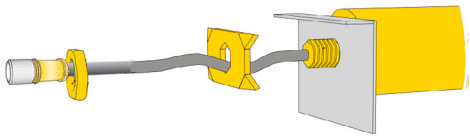

Tightening torque : 30 Nm ±10%

Reference	Claw plate	Washer	Nut
AM-FE-A	P-0C1	FSY02	FEY-02

M8 threaded fixed shaft

Conveyor with holes Ø8,4mm

Tightening torque : 30 Nm ±10%

Ø 8,4 mm

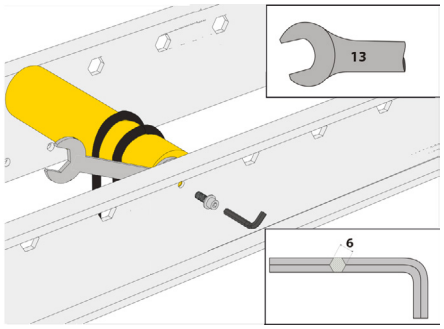

	Bolt
Reference	SP-M8-14

9 - Wiring and commands

Wiring

To connect a motorized roller serie PM605XE, it should be used a female connector M8 – 5 pins :

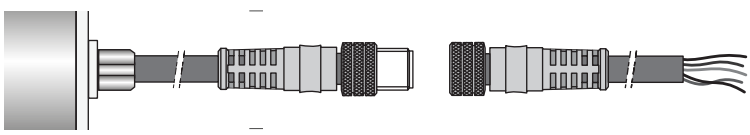

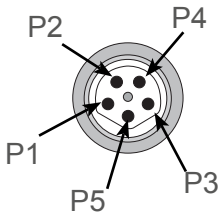

P1	24 VDC	Brown
P2	CW/CCW	White
P3	0 VDC	Blue
P4	Start / Stop	Black
P5	Speed variation	Grey

Interface scheme

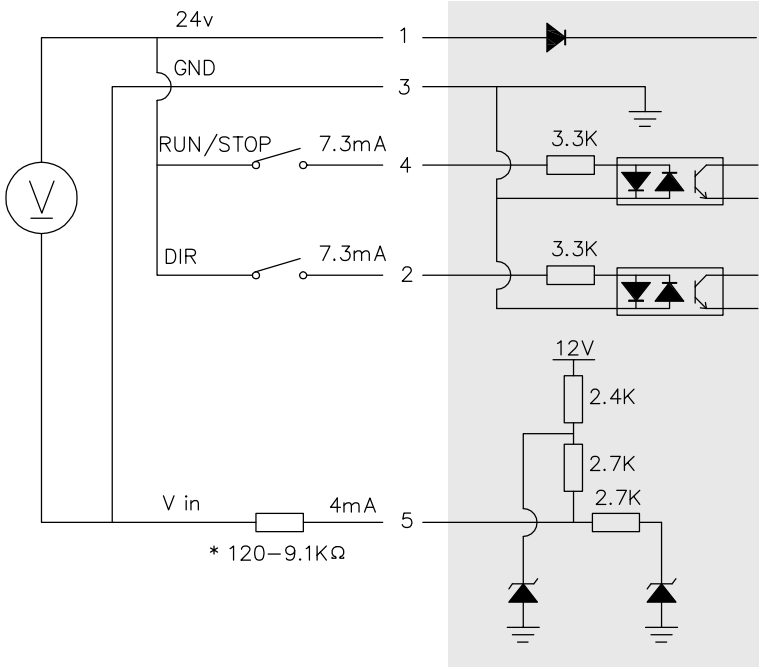

Pin 1 and 3 - 24VDC power supply

The motorized roller is protected against reverse polarity 0 to 24VDC.

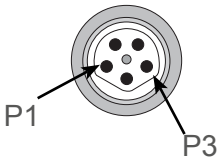

Pin P1 - Brown wire - 24VDC
Pin P3 - Blue wire - 0V

It's recommended that a 24VDC switching power supply that can accept a 150% overcurrent for few milliseconds.

Pin 2 - Rotation direction

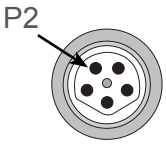

Pin P2 - White wire - Direction of rotation

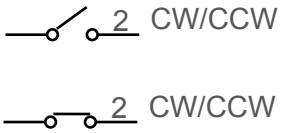

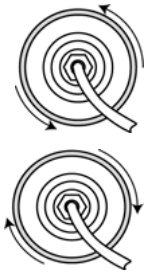

Pin 4 - Start / Stop

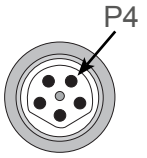

Pin P4 - Black wire

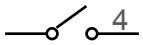

Stop

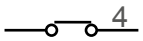

Start

Pin 5 - Speed variation

Speed variation by injection of analogic external voltage 0-10VDC

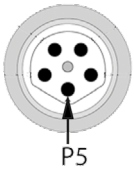

Pin P5 - Grey wire - Speed variation 0~10VDC 5

⚠ Imperatively connect the 0V power of the motorized roller with 0V of 0-10V supply for speed variation.

Speed variation with speed adaptator

Motor side

Extension cable side

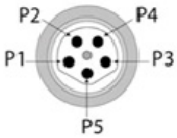

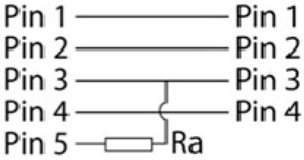

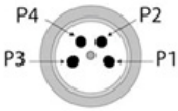

Speed adaptator		PM605XE		
Ref.	Ra (KΩ)	Speed code 60	Speed code 30	Speed code 17
NA	Open	74,7	35,4	21,0
BG20342-6K2	6,2	68,5	32,4	19,3
BG20342-4K3	4,3	56,0	26,5	15,8
BG20342-3K3	3,3	49,8	23,6	14,0
BG20342-2K2	2,2	43,6	20,6	12,3
BG20342-1K8	1,8	37,3	17,7	10,5
BG20342-1K2	1,2	30,2	14,3	8,5
BG20342-750	0,75	24,9	11,8	7,0
BG20342-430	0,43	18,7	8,8	5,3
NA	Shuntée	12,4	5,9	3,5

10 - Accessories

Ribbed belt

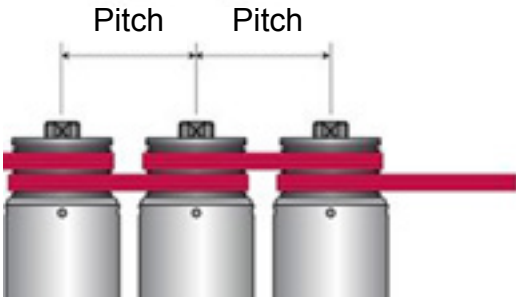

HUTCHINSON

Pitch between the rollers (mm) For pulley Ø43mm	Number of teeth		
	2	3	4
53-56	Ref. 2PJ246-43	Ref. 3PJ246-43	-
60-63	Ref. 2PJ256-43	Ref. 3PJ256-43	-
64-65	Ref. 2PJ265-43	Ref. 3PJ265-43	-
66-67	Ref. 2PJ270-43	Ref. 3PJ270-43	-
71-72	Ref. 2PJ282-43	Ref. 3PJ282-43	-
73-75	Ref. 2PJ286-43	Ref. 3PJ286-43	Ref. 4PJ286-43
76-78	Ref. 2PJ290-43	Ref. 3PJ290-43	-
80-84	Ref. 2PJ302-43	Ref. 3PJ302-43	Ref. 4PJ302-43
87-91	Ref. 2PJ314-43	Ref. 3PJ314-43	-
92-95	Ref. 2PJ316-43	Ref. 3PJ316-43	-
97-101	Ref. 2PJ336-43	Ref. 3PJ336-43	Ref. 4PJ336-43
103-107	Ref. 2PJ346-43	Ref. 3PJ346-43	-
115-118	Ref. 2PJ372-43	Ref. 3PJ372-43	Ref. 4PJ372-43
119-121	Ref. 2PJ376-43	Ref. 3PJ376-43	Ref. 4PJ376-43
123-128	Ref. 2PJ388-43	Ref. 3PJ388-43	Ref. 4PJ388-43
129-134	-	Ref. 3PJ416-43	Ref. 4PJ416-43
142-147	Ref. 2PJ436-43	Ref. 3PJ436-43	Ref. 4PJ436-43
150-156	Ref. 2PJ442-43	Ref. 3PJ442-43	Ref. 4PJ442-43
157-161	-	Ref. 3PJ456-43	Ref. 4PJ456-43
170-176	Ref. 2PJ486-43	Ref. 3PJ486-43	Ref. 4PJ486-43
196-202	Ref. 2PJ536-43	Ref. 3PJ536-43	-
208-215	-	Ref. 3PJ570-43	Ref. 4PJ570-43

Extension cables

Extension cable with connector M8x5 pins – 2 or 5 meters

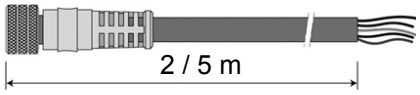

Length	Extension cable reference
2m	405000P02M020
5m	405000P02M050

Extension cable with connector M8x5 pins – Male / Female

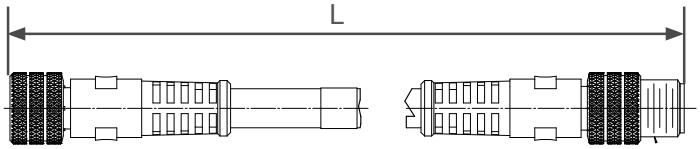

Length (L)	Extension cable reference
1m	445030B41M010
2m	445030B41M020
5m	445030B41M050

- Maximum extension cable length can be used is 5m length.
- Do not use multiple extension cable per MDR.

Speed adaptor

Ref	Ra (KΩ)
BG20342-6k2	6,2
BG20342-4k3	4,3
BG20342-3k3	3,3
BG20342-2k2	2,2
BG20342-1k8	1,8
BG20342-1k2	1,2
BG20342-750	0,75
BG20342-430	0,43

24VDC power supply

Reference	Input	Output	Power	Start-up boost
CT-10-241	380~480V 3 ph	24V-10A	240W	120%
QT-20-241		24V-20A	480W	150%
QT-40-241		24V-40A	960W	150%

- Very weak inrush current.
- Accepts excess current of 120 to 150% at start-up (according to model)

11 - Product identification

Round label

Power Moller® rollers come with a round label affixed to the endcaps at the motor end.
The following information are shown on the label :

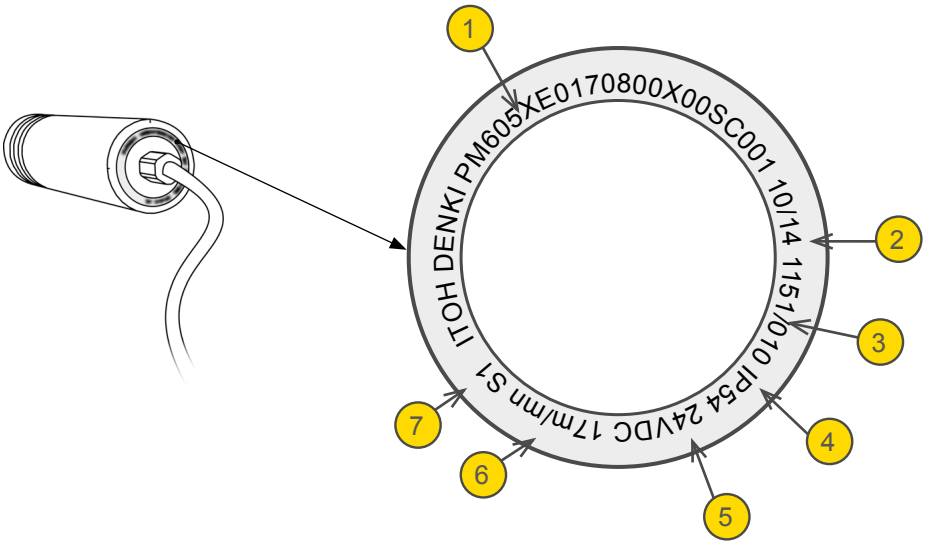

1. Product reference number
2. Month and year of shipment
3. Serial number
4. Protection index
5. Power supply
6. Speed
7. Operation

Square label

Power Moller® rollers come with a square self-adhesive label that must be affixed to the conveyor, to facilitate any future maintenance. The following information are shown on the label :

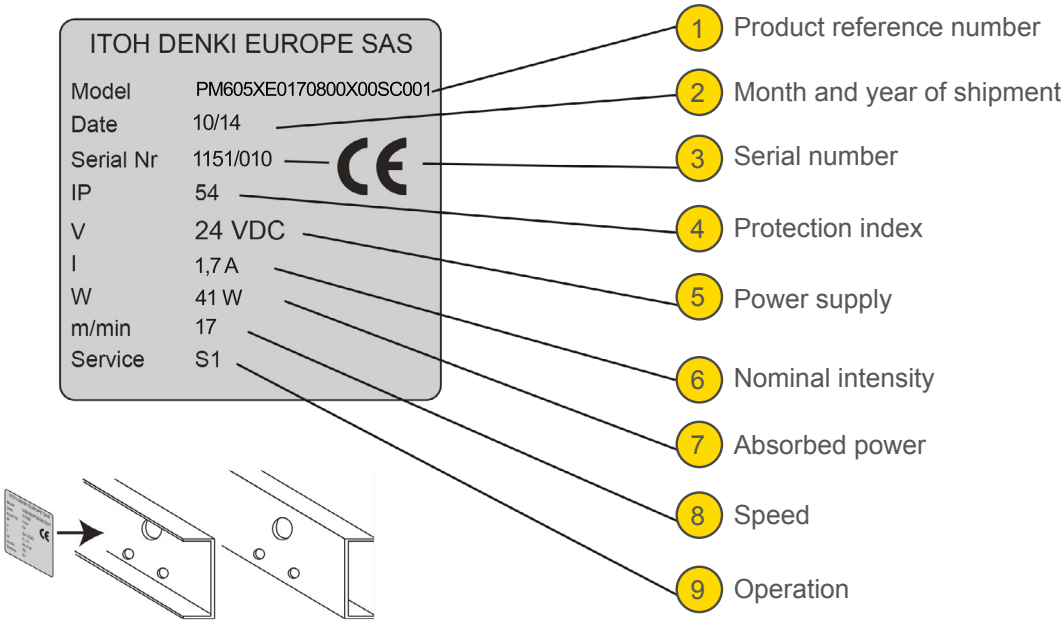

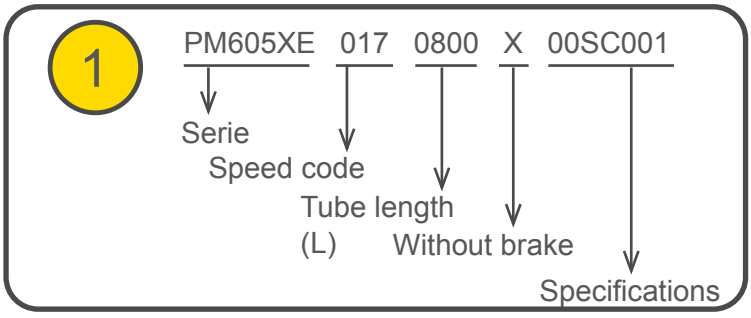

Annex 1

Incorporation declaration
in accordance with the EC Machinery Directive 2006/42/EC, Annex II B

The manufacturer:

ITOH DENKI CO., Ltd
1146-2 Asazuma-Cho, Kasai, Hyogo 679-0105 Japan

Distributed in Europe by :

ITOH DENKI Europe SAS
490 avenue des Jourdies - PAE les Jourdies - BP 323
74807 St Pierre en Faucigny Cedex - France

hereby declares that the product series :

PM605XE motorized roller

is an incomplete machine as defined in the EC Machinery Directive and therefore does not fully meet the requirements of this Directive. Commissioning is prohibited until the whole machine/system in which it is incorporated is declared to be in compliance with the EC Machinery Directive

The health and safety requirements of Annex I have been applied. The special technical documents in accordance with Annex VII have been drawn up (and, if appropriate, submitted to the competent authorities).

Person authorized to compile the technical documentation :

ITOH DENKI CO., Ltd
Toshiyuki TACHIBANA
1146-2 Asazuma-Cho, Kasai, Hyogo 679-0105 Japan

ITOH DENKI EUROPE SAS
Masayuki SHIMODA
490 Avenue des Jourdies, 74800 St Pierre en Faucigny - France

EC Directives applied :
- Machinery Directive 2006/42/EC
- European EMC Directive 2014/30/EC
- European RoHS Directive 2011/65/EU

ITOH DENKI EUROPE SAS, undertakes to forward, following a duly motivated request from the national authorities, the relevant information concerning the quasi-machine.

Saint Pierre en Faucigny, 19 July 2021
T. AKASHI, General Director

ITOH DENKI EUROPE S.A.S.

490 Av. des Jourdies - P.A.E. les Jourdies

74800 St Pierre en Faucigny - France

Phone : +33 (0)4 50 03 09 99 Fax : +33 (0)4 50 03 07 60

www.itoh-denki.com