mimatic®

Tool Systems

Your Partner For Clever Tooling

Cutting Tools

- Thread milling
- Groove milling
- Gear milling
- Contour and radius milling
- Dovetail milling
- Sawing, cutting, slitting
- etc.

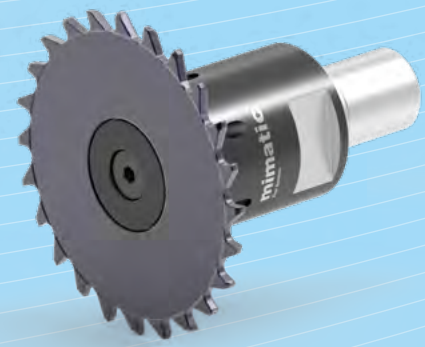

Manufacturer of Precision Tools Since 1974

mimatic® Tool Systems

Symbols

Type designation

Tool shank without clamping surface

Tool shank with Weldon clamping surface

Solid carbide shaft without clamping surface

Solid carbide shaft with Weldon clamping surface

Tool with Conical tool shank

Tool with tighening thread

Cutter with cross groove

Smallest necessary bore-diameter

Maximum cutting depth

Internal coolant supply

Blank inserts must be equipped with a clearance angle!

Inserts without profile, ready for use with clearance angle.

Inserts for guard ring slots

Inserts for O-ring slots

DIN standard

Inserts with chamfered edges

Inserts with chipbreakers from 5 mm cutting width

For chamfering and deburring

Number of inserts (Polygon Cutter)

Number of inserts (Polygon Cutter)

Thread depth max.

Edge radius

Full radius

Milling inserts for cutting off

Formula for Tool Lengths

$$L_{WKZ} = L_{GK} + L_1 + L_{P1} \ (+L_{P2})$$

mimatic®
Tool Systems

Axial Grooving, adjustable

mimatic® Tool Systems

Axial Cutting Tools

- with scalable cutting diameter and fine-adjustment
- all Axial-Cutting Tools without Insert Holders

Up to diameter Ø 28 also as PolyMILL fixed size

ISO 7388-1 | ISO 7388-1 (MAS-BT)

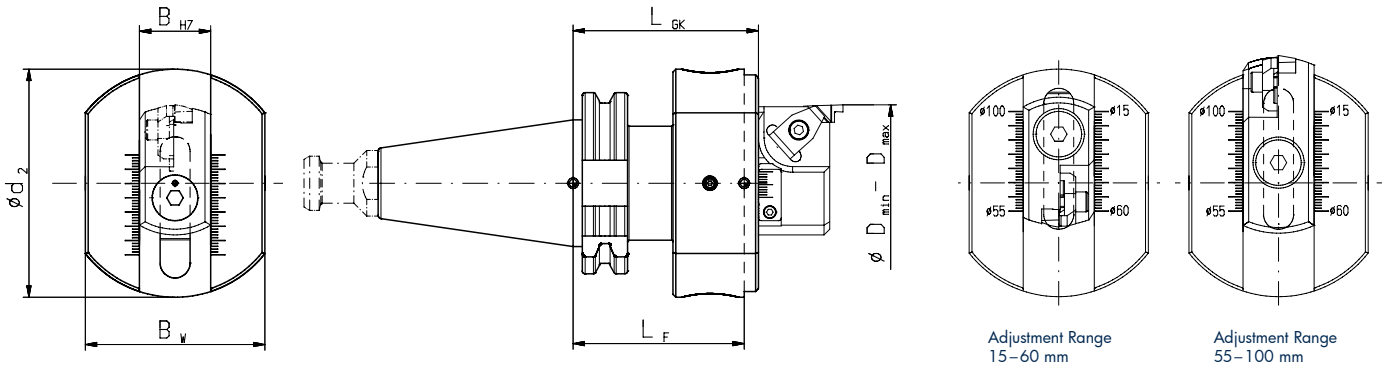

Order No.	Adjustment Range Ø mm	Shank size	LF mm	LGK mm	d2 mm	BW mm	BH7 mm
133134	15 – 100	SK 40	60	65	80	63	25
133151	15 – 100	SK 50	60	65	80	63	25
133109	15 – 100	BT 40	60	65	80	63	25

DIN 69893

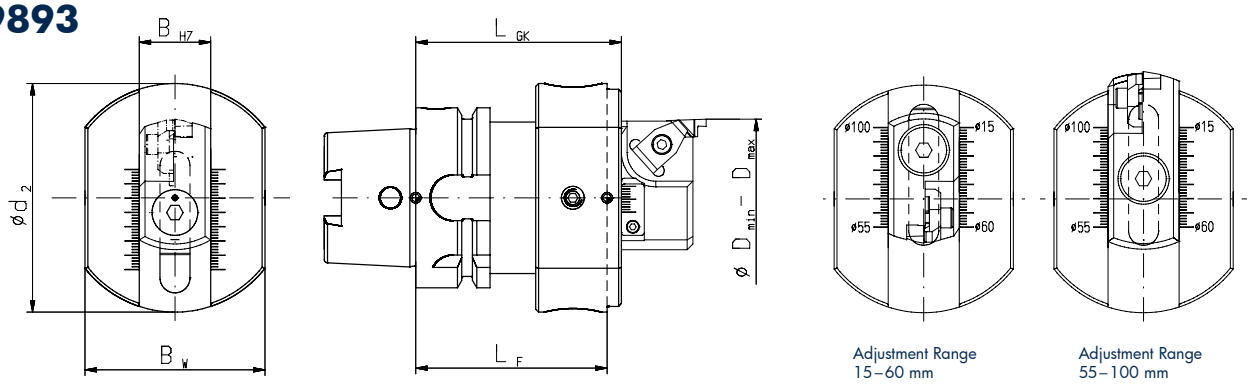

Order No.	Adjustment Range Ø mm	Shank size	LF mm	LGK mm	d2 mm	BW mm	BH7 mm
133118	15 – 100	HSK 63	72	65	80	63	25

Komet® ABS

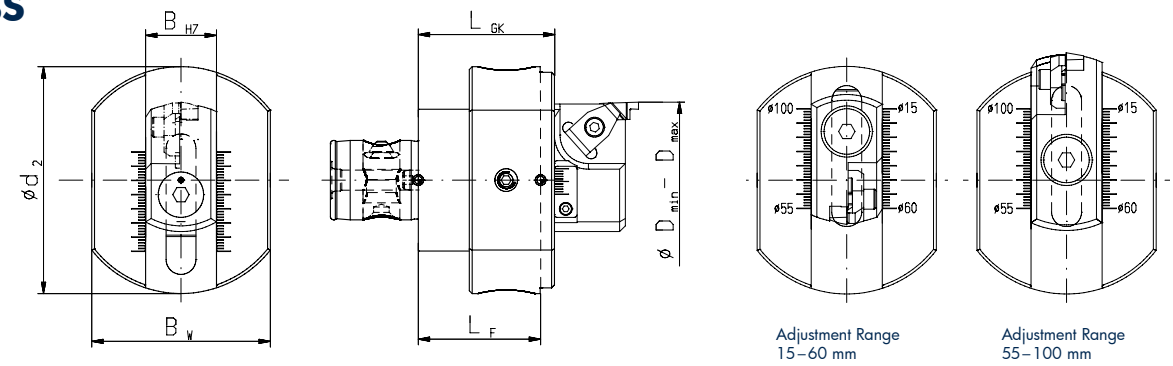

Order No.	Adjustment Range Ø mm	Shank size	LF mm	LGK mm	d2 mm	BW mm	BH7 mm
133096	15 – 100	ABS 50	48	43	80	63	25
133135	15 – 100	ABS 63	50	45	80	63	25

mimatic Tool Systems

Axial Cutting Tools

- with scalable cutting diameter and fine-adjustment
- all Axial-Cutting Tools without Insert Holders

ISO 26623-1 Capto

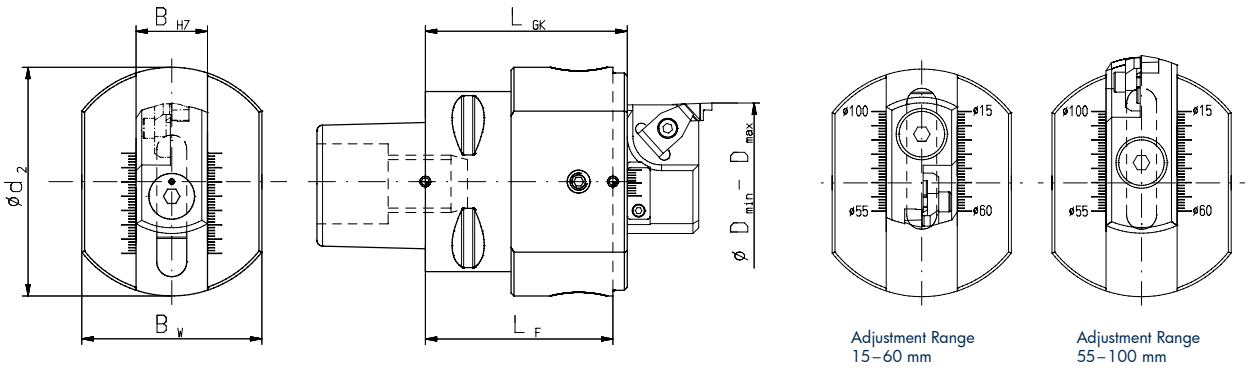

Order No.	Adjustment Range Ø mm	Shank size	LF mm	LGK mm	d2 mm	BW mm	BH7 mm	Spare part No. Fitting screw DIN 7379	Spare part No. Size
167985	15-100	C6	70,6	65,6	80	63	25	114445	10M8 x 20

Insert Holders

- Special-Insert holders on request

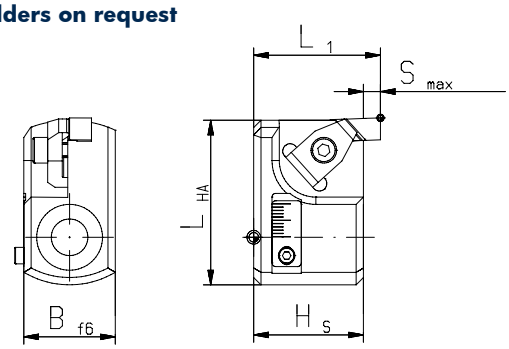

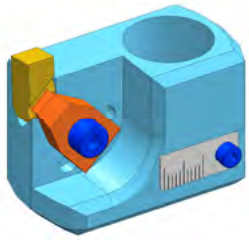

Order No.	Adjustment Range Ø mm	LHA mm	Bf6 mm	HS mm	l1 mm	Smax. mm	Spare part No. Clamping claw	Spare part No. Screw *	Spare part No. Screw-driver *
133117	15 – 60	45	25	30	34	4	107540	114688	107578

Screw torque 5 Nm

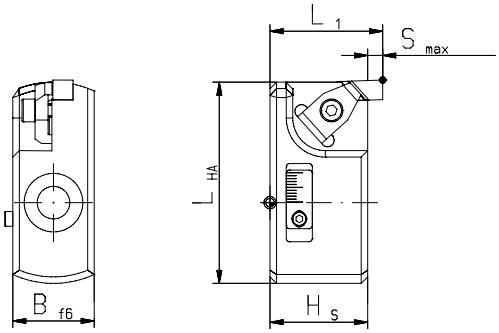

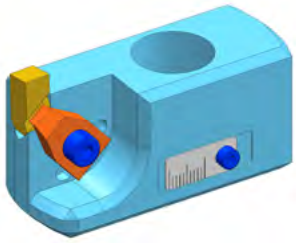

Order No.	Adjustment Range Ø mm	LHA mm	Bf6 mm	HS mm	l1 mm	Smax. mm	Spare part No. Clamping claw	Spare part No. Screw *	Spare part No. Screw-driver *
133090	55-100	62	25	30	34	4	107540	114688	107578

Screw torque 5 Nm

* **Screwdriver and clamping screw included in delivery**

mimatic Tool Systems

Insert Holders

■ **Special-Insert holders on request**

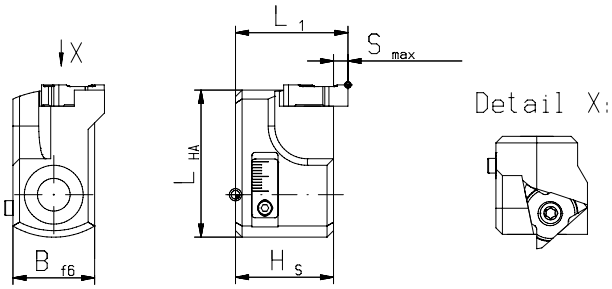

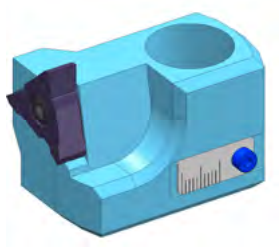

Order No.	Adjustment Range Ø mm	LHA mm	Bf6 mm	HS mm	l1 mm	Smax. mm	Spare part No. Clamping claw	Screw *	Screw-driver *
143487	15-60 / 55-100	45	25	30	34,4	4	–	107551	111594

Screw torque 5,5 Nm

Unprofiled Carbide Inserts

■ **Cutting data see page 169**

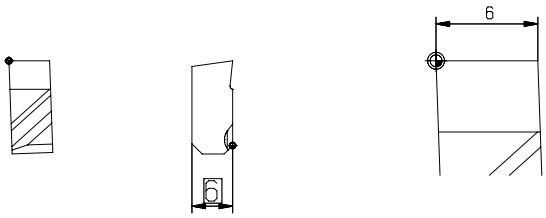

without profile

Size	Width mm	Height mm	Smax. mm	K10	P25	FKN
A 6R	6	6	4	on request	on request	142855

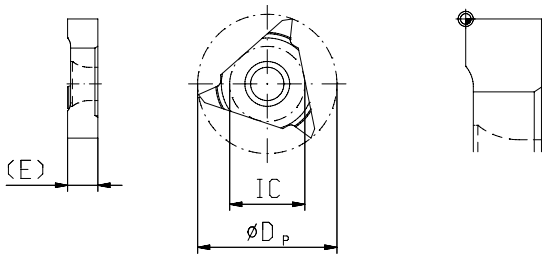

without profile

Size	E mm	Height mm	Smax. mm	K10	FKN	
01AX LI	4	–	4	161101	162201	
01AX LI	5	–	4	–	162202	
01AX LI	6,5	–	4	161103	162203	

* **Screwdriver and clamping screw included in delivery**

Various forms of insert profiles.
Other profiles according to DIN or drawing are available on request.

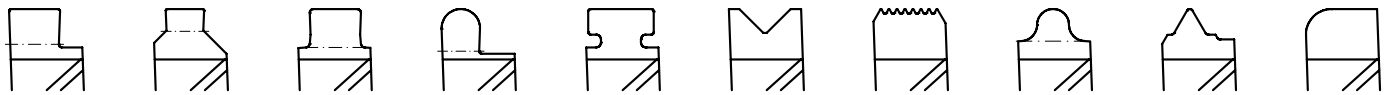

mimatic
Tool Systems

Function and Handling

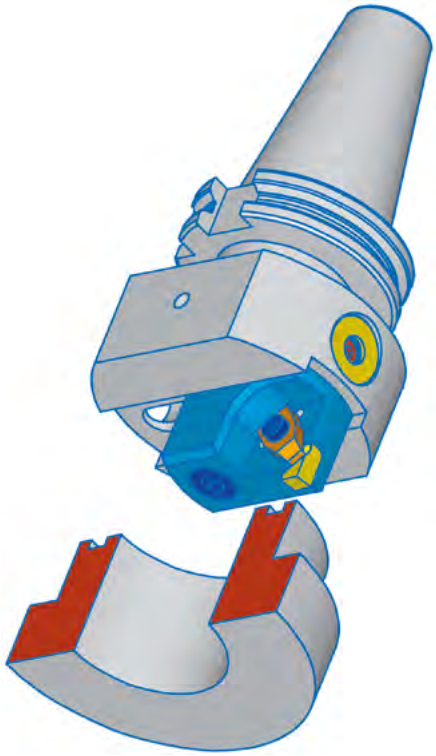

Technical Data

Complete tool, consisting of
- Axial-Cutting-Tool
- 2 insert holders for cutting range
  a) 15 – 60 mm
  b) 55 – 100 mm

Advantages

This tool makes operations possible in workpieces, which cannot be clamped on turning machines.

Applications

Making grooves (DIN- or special grooves) up to a
- Cutting depth of max. 4,0 mm
- Cutting width of max. 6,5 mm

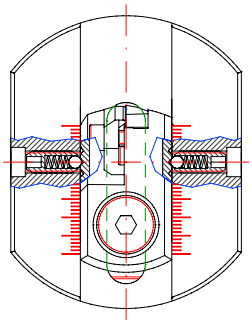

Rough Adjustment

1. Removing the clamping screw
2. Rough adjustment of the insertholder over the screening system (2,5 mm)
3. Low tighten the clamping screw

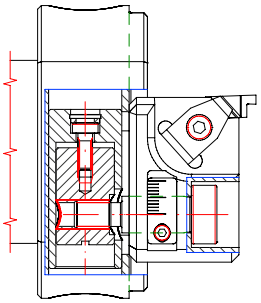

Fine Adjustment

1. Fine adjustment over the fine adjustment screw
2. Tighten the clamping screw

On request:
Axial grooving with PolyMILL

Request Form for Grooving

Please download our fillable PDF form for a detailed grooving request send us back via email: **info@mimatic.de**

Request form:
www.mimatic.de/Nut_DE.pdf

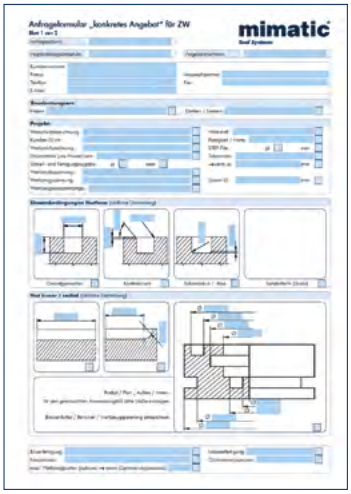

mimatic®

Tool Systems

Your Partner For Clever Tooling

- Circular- and Thread Milling Tools
- RPK-Reamers with Polygonal Interface
- Driven Toolholders for CNC Machining Centers
- Driven Toolholders for CNC Turning Machines
- Multi-Spindle Technology
- Modular Quick Change Toolholders mimatic® mi
- Static Toolholders for CNC Turning Machines
- Precision Chucks
- Special Cutting Tools

203238 KATALOG-ZW-E09

mimatic®
Tool Systems

Made in Germany

mimatic GmbH
Westendstraße 3
D-87488 Betzigau
Tel. +49 (0) 831 / 574 44-0
info@mimatic.de
www.mimatic.de