PVIA-2TE series

2.0 – 5.5 µm InAs and InAsSb two-stage thermoelectrically cooled, optically immersed photovoltaic detectors

PVIA-2TE series features two-stage thermoelectrically cooled IR photovoltaic detectors based on InAsSb alloys, optically immersed in order to improve performance of the devices. They do not contain mercury or cadmium and are complying with the RoHS Directive. 3° wedged sapphire (wAl_2O_3) window prevents unwanted interference effects.

Spectral response (T_a = 20°C, V_b = 0 mV)

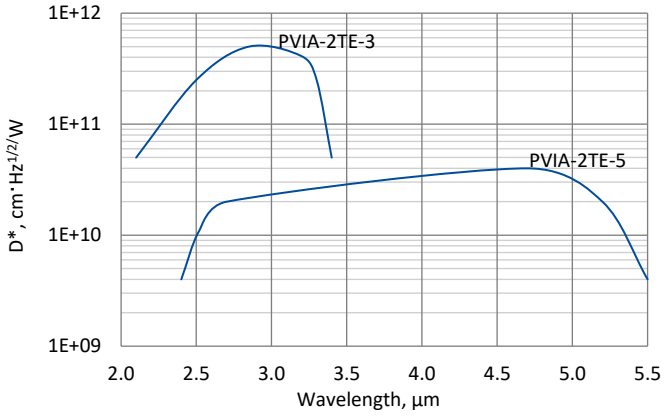

Exemplary spectral detectivity, the spectral response of delivered devices may differ.

Specification (T_a = 20°C, V_b = 0 mV)

Parameter	Detector type	
	PVIA-2TE-3	PVIA-2TE-5
Active element material	epitaxial InAs heterostructure	epitaxial InAsSb heterostructure
Cut-on wavelength $\lambda_{cut\text{-}on}$ (10 %), µm	2.1±0.2	2.4±0.2
Peak wavelength λ_{peak}, µm	2.9±0.3	4.7±0.3
Cut-off wavelength $\lambda_{cut\text{-}off}$ (10 %), µm	3.4±0.2	5.5±0.2
Detectivity $D^*(\lambda_{peak})$, cm·Hz$^{1/2}$/W	≥5.0×10^{11}	≥4.0×10^{10}
Current responsivity $R_i(\lambda_{peak})$, A/W	≥1.3	≥1.5
Time constant τ, ns	≤15	≤5
Resistance R, Ω	≥200k	≥1.0k
Active element temperature T_{det}, K	~230	
Optical area A_O, mm×mm	1×1	
Package	TO8	
Acceptance angle Φ	~36°	
Window	wAl_2O_3	

Two-stage thermoelectric cooler parameters

Parameter	Value
T_{det}, K	~230
V_{max}, V	1.3
I_{max}, A	1.2
Q_{max}, W	0.36

Thermistor characteristics

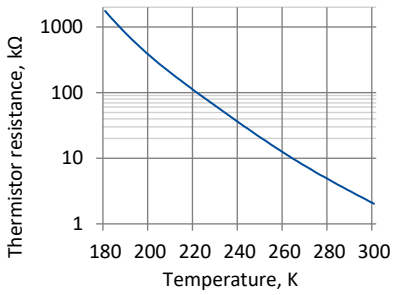

Spectral transmission of wAl_2O_3 window (typical example)

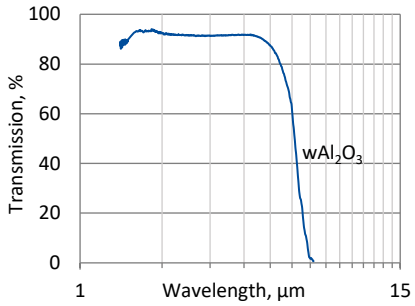

Mechanical layout, mm

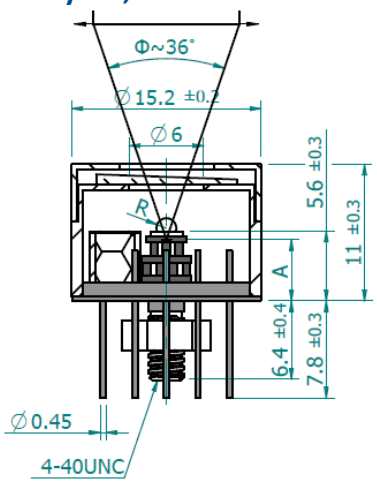

Parameter	Value
Immersion microlens shape	hyperhemisphere
Optical area A_O, mm×mm	1×1
R, mm	0.8
A, mm	3.2±0.3

Φ – acceptance angle
R – hyperhemisphere microlens radius
A – distance from the bottom of the 2TE-TO8 header to the focal plane

Bottom view

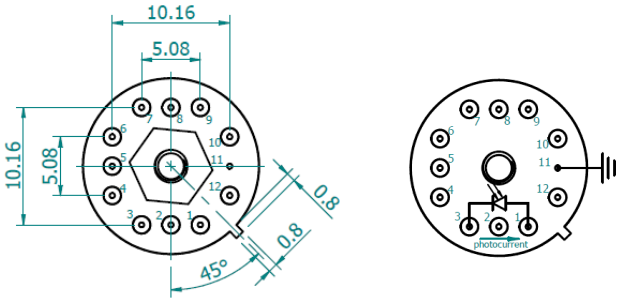

Function	Pin number
Detector	1, 3
Reverse bias (optional)	1(–), 3(+)
Thermistor	7, 9
TE cooler supply	2(+), 8(–)
Chassis ground	11
Not used	4, 5, 6, 10, 12

Dedicated preamplifiers

„all-in-one" AIP

programmable PIP

standard MIP

small SIP-TO8