PVIA series

2.0 – 5.5 µm InAs and InAsSb ambient temperature, optically immersed photovoltaic detectors

PVIA series features uncooled IR photovoltaic detectors based on $InAs_{1-x}Sb_x$ alloys, optically immersed in order to improve performance of the devices. They do not contain mercury or cadmium and are complying with the RoHS Directive.

Spectral response (T_a = 20°C, V_b = 0 mV)

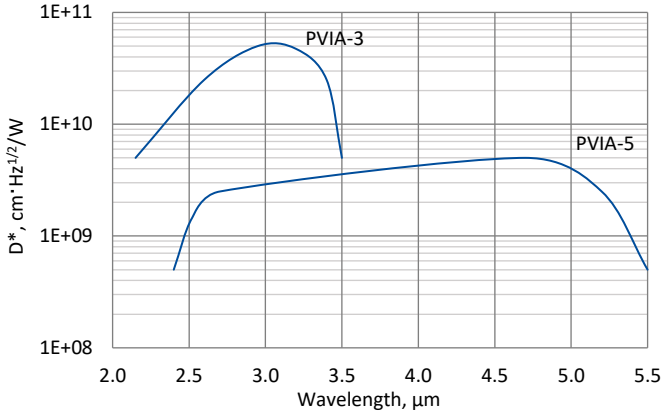

Exemplary spectral detectivity, the spectral response of delivered devices may differ.

Specification (T_a = 20°C, V_b = 0 mV)

Parameter	Detector type	
	PVIA-3	PVIA-5
Active element material	epitaxial InAs heterostructure	epitaxial InAsSb heterostructure
Cut-on wavelength $\lambda_{cut\text{-}on}$ (10 %), µm	2.15±0.20	2.3±0.2
Peak wavelength λ_{peak}, µm	2.95±0.30	4.7±0.3
Cut-off wavelength $\lambda_{cut\text{-}off}$ (10 %), µm	3.5±0.2	5.5±0.2
Current responsivity $R_i(\lambda_{peak})$, A/W	≥1.3	≥1.3
Detectivity $D^*(\lambda_{peak})$, cm·Hz$^{1/2}$/W	$\geq 5.0\times10^{10}$	$\geq 5.0\times10^{9}$
Time constant τ, ns	≤20	≤15
Resistance R, Ω	≥2k	≥70
Optical area A_O, mm×mm	1×1	
Package	TO39	
Acceptance angle Φ	~36°	
Window	none	

Mechanical layout, mm

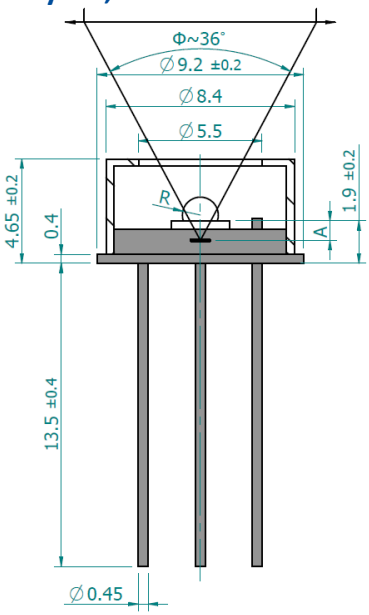

Parameter	Value
Immersion microlens shape	hyperhemisphere
Optical area A_O, mm×mm	1×1
R, mm	0.8
A, mm	2.4±0.2

Φ – acceptance angle
R – hyperhemisphere microlens radius
A – distance from the bottom of hyperhemisphere microlens to the focal plane

Bottom view

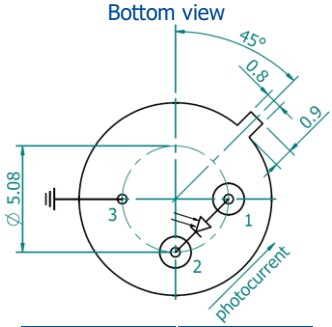

Function	Pin number
Detector	1, 2
Chassis ground	3

Dedicated preamplifier

small SIP-TO39