2/2-way automatic-valve – type PKW

with pneumatic actuator agturn®

Technical data sheet

www.bar-gmbh.de

bar
A WATTS Brand

Product description

Shut-off valve is made of stainless steel with floating precision ball. The valve is operated pneumatically (double- and single-acting) and is characterised by a long service life and high operational safety.

Technical data of 2/2-way ball valve

	Technical data
Nominal size	DN15 – DN100
Connection type	intermediate flange connection acc. to DIN EN 1092
Mounting position	any orientation
Nominal pressure rating	DN 15 – 50, DN 80: PN 40 DN 65, DN 100: PN 16
Operating pressure	see pressure-temperature diagram
Temperature range	-20 °C to 180 °C
Materials	casing: stainless steel AISI 316 (1.4408) ball: stainless steel AISI 316 (1.4401) switching shaft: stainless steel AISI 316 (1.4401) sealing bowl: PTFE switching shaft seal: PTFE
Flow media	neutral gases and liquids (other media on request)
Flow direction	any direction

Technical data of drive GD/GS

	Technical data
Control pressure	2 to 8 bar
Control medium	air or neutral gases (other media on request) acc. to DIN ISO 8573-1 Class 4 (minimum requirement)
Ambient temperature	-20 °C to +80 °C (standard) -20 °C to +160 °C
Actuation	pneumatically double- or single-acting
End position adjustment	+5° to -5° adjustable in both end positions
Interfaces	acc. to EN ISO 5211 and VDI/VDE 3845
Certificates	SIL 3 by TÜV Rheinland, test basis IEC61508 Parts 1-2 and 4-7:2010

Product features

- Full passage
- Maintenance-free
- Optionally available with end position feedback, position controllers and solenoid valves
- Anti-blowout spindle
- Usage also with vacuum and high flow velocities
- Alternatively also can be delivered with electric rotary actuator, hand lever or gearbox

End position adjustment

Solenoid valve interface

Special designs

Please contact us.

Pressure-temperature diagram

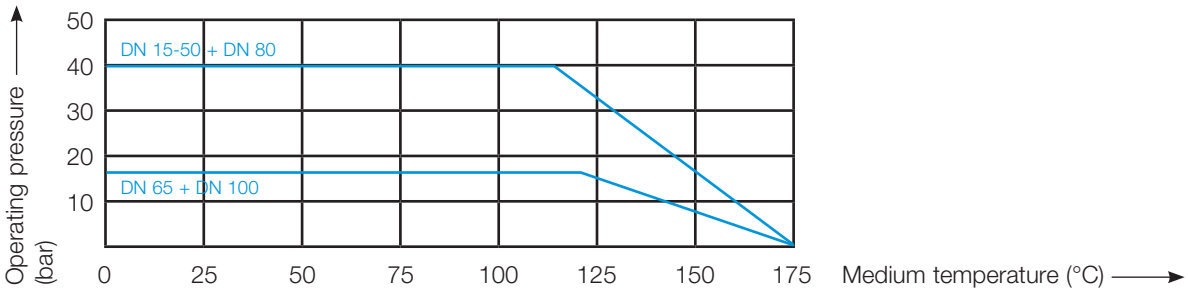

Table of dimensions

Inch	DN	Actuator	A	B	C	D	E	F	G	H	I	øJ	øK	L	M/M1	N	Weight (kg)
1/2“	15	032	114	41	135.0	24.5	G 1/8“	/	55	49	49	81	65	4 x M12	16/2	/	1.96
		040	120		146.0	24	G 1/4“	/	60.5	60						15	2.13
		052	147		158.0	48	G 1/4“	74.5	60	72						9	2.53
		063	165		178.0	61	G 1/4“	83	72	88						12	3.23
3/4“	20	032	114	44	140.0	24.5	G 1/8“	/	55	49	54	99	75	4 x M12	18/2	/	2.66
		040	120		151.0	24	G 1/4“	/	60.5	60						15	2.83
		052	147		163.0	48	G 1/4“	74.5	60	72						9	3.23
		063	165		183.0	61	G 1/4“	83	72	88						12	3.93
1/0“	25	052	147	50	174.0	48	G 1/4“	74.5	60	72	65	115	85	4 x M12	18/2	9	3.94
		063	165		190.0	61	G 1/4“	83	72	88						12	4.64
		075	182		202.0	73.3	G 1/4“	95	84	99.5						11	5.19
		083	208		211.0	80	G 1/4“	103	92	109						12	5.89
5/4“	32	063	165	60	202.0	61	G 1/4“	83	72	88	77	140	100	4 x M16	18/2	12	6.12
		083	208		223.0	80	G 1/4“	103	92	109						11	7.37
3/2“	40	063	165	65	211.0	61	G 1/4“	83	72	88	86	150	110	4 x M16	18/3	12	7.40
		075	182		223.0	73.3	G 1/4“	95	84	99.5						11	7.95
		083	208		232.0	80	G 1/4“	103	92	109						12	8.65
		092	262		240.0	91	G 1/4“	109.5	102	116.5						9	10.64
2/0“	50	075	182	80	230.0	73	G 1/4“	95	84	99.5	93	165	125	4 x M16	20/3	11	9.08
		083	208		239.0	80	G 1/4“	103	92	109						12	9.78
		092	262		247.0	91	G 1/4“	109.5	102	116.5						9	11.77
		105	270		263.0	99.5	G 1/4“	124.5	115	133						7.5	12.59
5/2“	65	083	208	110	256.0	80	G 1/4“	103	92	109	110	185	145	4 x M16	22/3	12	14.78
		092	262		264.0	91	G 1/4“	109.5	102	116.5						9	16.77
		125	301		302.0	127	G 1/4“	142	135	155						8.5	21.53
		140	395		319.0	138	G 1/4“	/	152	172						7	25.55

Table of dimensions (continuation)

Inch	DN	Actua-tor	A	B	C	D	E	F	G	H	I	øJ	øK	L	M/M1	N	Weight (kg)
3/0“	80	092	262	120	274.0	91	G 1/4“	109.5	102	116.5	120	200	160	8 x M16	24/3	9	19.63
		105	270		290.0	99.5	G 1/4“	124.5	115	133						7.5	20.45
		125	301		312.0	127	G 1/4“	142	135	155						8.5	24.39
		140	395		329.0	138	G 1/4“	/	152	172						7	28.41
4/0“	100	105	270	150	302.0	99.5	G 1/4“	124.5	115	133	132	220	180	8 x M16	20/3	7.5	25.96
		125	301		324.0	127	G 1/4“	142	135	155						8.5	29.90
		140	395		341.0	138	G 1/4“	/	152	172						7	33.92

Actuator assignment

GD			
Rp	DN	4 bar actuators	6 bar actuators
1/2“	15	GD-040	GD-032
3/4“	20	GD-040	GD-032
1/0“	25	GD-063	GD-052
5/4“	32	GD-063	GD-063
3/2“	40	GD-075	GD-063
2/0“	50	GD-083	GD-075
5/2“	65	GD-092	GD-083
3/0“	80	GD-105	GD-092
4/0“	100	GD-125	GD-105

GS			
Rp	DN	4 bar actuators	6 bar actuators
1/2“	15	GS-063-08	GS-052-12
3/4“	20	GS-063-08	GS-052-12
1/0“	25	GS-083-08	GS-075-12
5/4“	32	GS-083-08	GS-083-08
3/2“	40	GS-105-08	GS-092-10
2/0“	50	GS-105-08	GS-092-12
5/2“	65	GS-140-06	GS-125-10
3/0“	80	GS-140-08	GS-125-12
4/0“	100	GS-140-08	GS-140-10

Dimensional drawing

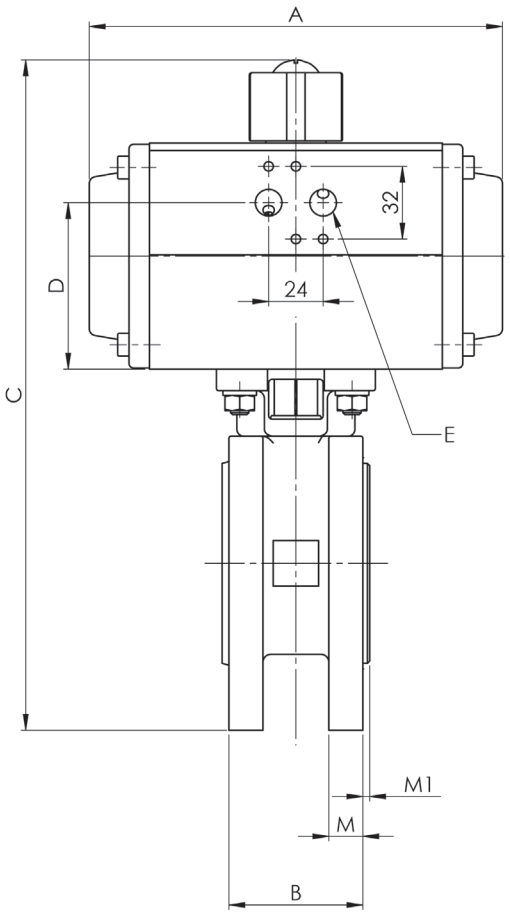

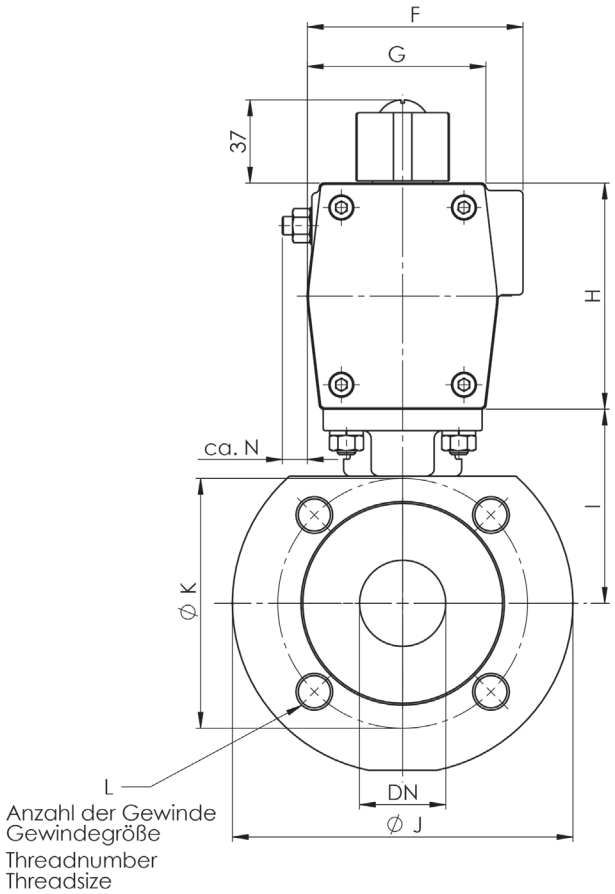

Ordering code

PKW-	1/0-	025-	C	GS-075-	12
	Connection dimension in inches	Nominal size	Spring effect: C = Spring force closing A = Spring force opening (not applicable for double-acting design	Actuator designation	Spring code (not applicable for double-acting design)

The descriptions and photographs contained in this product specification sheet are supplied by way of information only and are not binding.
bar GmbH reserves the right to carry out any technical and design improvements to its products without prior notice.
Warranty: All sales and contracts for sale are expressly conditioned on the buyer's assent to bar GmbH terms and conditions found on its website at www.bar-gmbh.de.
bar GmbH hereby objects to any term, different from or additonal to bar GmbH terms, contained in any buyer communication in any form,
unless agreed to in a writing signed by an officer of bar GmbH.

A WATTS Brand

bar pneumatische Steuerungssysteme GmbH
Auf der Hohl 1 • 53547 Dattenberg • Germany
Tel. +49 (0) 2644 96070 • Fax +49 (0) 2644 960735
bar-info@wattswater.com • www.bar-gmbh.de

© 2020 Watts