Automatic butterfly valve – type PZDS

with pneumatic rotary actuator actubar®

Technical data sheet

www.bar-gmbh.de

bar
A WATTS Brand

Product description

One-piece, blow-out safe, flow-fitting form, sealed-off and centric embedded butterfly-valve. The automated butterfly-valve is pneumatically operated (double- or single-acting).

Technical data butterfly-valve

	Technical data
Nominal size	DN 25 to DN 600
Connection	flange connection as per EN 1092-1 and EN 1092-2 PN6/10/16/25/40, ASME/ANSI 125/150, BS10-and BS10-e, JIS B2238 and JIS B2239 (more details on request)
Mounting position	any orientation
Nominal pressure	DN 25: max. 10 bar DN 32 – 350: max. 20 bar DN 400 – 600: max. 10 bar
Installation length	acc. to EN 558-1, row 20 ISO 5752, row 20 API 609 diagram 2 (except DN 400 - 600)
Temperature range	seat EDPM -15°C to +120°C
Material of butterfly valve parts	casing: DN 25 – cast iron GG25 casing: DN 32 – 600 – ductile cast GGG40 disk: stainless steel 1.4408 shaft: stainless steel 1.4028 seat: EPDM
Flow media	compare to the list of material resistance
Flow direction	any direction

Technical data actuator AD/AS

	Technical data
Control pressure	2 – 8 bar
Control medium / quality	air or neutral gases, (further media upon request), acc. to DIN ISO 8573-1 Class 4 (minimum requirement)
Ambient temperature	from -20°C to +80°C (standard), from -20°C to +160°C (high temperature version)
Actuation	pneumatic double or single acting
End position setting	+5° to -10° adjustable in both end positions
Interfaces	acc. to EN ISO 5211 and VDI/VDE 3845
Certificates	SIL 3 by TÜV Rheinland, test basis IEC61508 Parts 1-2 and 4-7:2010

Product Features

- conformity Directive 2014/68/EU (PED)
- ATEX Directive 2014/34/EU (ATEX)
- testing for tightness EN12266-1
- testing for a nti-static EN12266-2
- very good p ower transmission through robust multi-toothing between shaft and valve-disc.
- easy maintenance and blowout-safe shaft by a circlip.
- changeable disc and seat.
- shaft and casing without contact to the media inside.
- self-lubricating bearing bush
- casing 80µm epoxy-coated
- casing colour RAL 5017, blue
- seat NBR, FKM, silicone, EPDM -white on request.
- optionally equipped with limit stop indication, solenoid valves and positioner
- on request application at vacuum.
- alternatively deliverable with detent lever, gear or electric actuator.

Table of dimensions

Nominal width	Actuator	A	B	C	D	E	F	G	H	I	J	Weight (kg)
40	004	144	32	285	24	G 1/8“	82	68	68	130	/	2,91
	006	159		301	32	G 1/8“	90	76	84		/	3,51
	008	173		325	31	G 1/8“	109	98	108		/	4,67
	011	215		325	31	G 1/8“	109	98	108		/	5,29
50	004	144	32	296	24	G 1/8“	82	68	68	136	/	3,81
	006	159		312	32	G 1/8“	90	76	84		/	4,41
	008	173		336	31	G 1/8“	109	98	108		/	5,57
	011	215		336	31	G 1/8“	109	98	108		/	6,19
	018	213		360	36,5	G 1/4“	122	114	132		/	7,40
65	006	159	46	343	32	G 1/8“	90	76	84	145	/	4,71
	008	173		367	31	G 1/8“	109	98	108		/	5,87
	011	215		367	31	G 1/8“	109	98	108		/	6,49
	018	213		391	36,5	G 1/4“	127	114	132		/	7,70
	026	281		451	36,5	G 1/4“	127	114	132		60	10,05
80	006	159	46	354	32	G 1/8“	90	76	84	151	/	5,41
	008	173		378	31	G 1/8“	109	98	108		/	6,57
	011	215		378	31	G 1/8“	109	98	108		/	7,19
	018	213		402	36,5	G 1/4“	127	114	132		/	8,40
	026	281		462	36,5	G 1/4“	127	114	132		60	10,75
100	011	215	52	419	31	G 1/8“	109	98	84	175	/	7,99
	018	213		443	36,5	G 1/4“	127	114	132		/	9,20
	026	281		443	36,5	G 1/4“	127	114	132		60	11,55
	037	266		472	40,5	G 1/4“	155	138	161		60	13,51

Table of dimensions (continuation)

Nominal width	Actuator	A	B	C	D	E	F	G	H	I	J	Weight (kg)
125	018	213	56	472	36,5	G 1/4“	127	114	132	190	/	11,10
	026	281		472	36,5	G 1/4“	127	114	132		/	12,57
	037	266		501	40,5	G 1/4“	155	138	161		/	14,53
	050	347		501	40,5	G 1/4“	155	138	161		/	17,55
	076	329		620	50	G 1/4“	196	176	200		80	23,83
150	026	281	56	496	36,5	G 1/4“	127	114	132	203	/	13,57
	037	266		525	40,5	G 1/4“	155	138	161		/	15,53
	050	347		525	40,5	G 1/4“	155	138	161		/	18,55
	076	329		644	50	G 1/4“	196	176	200		80	24,83
200	037	266	60	581	40,5	G 1/4“	155	138	161	225	/	21,93
	050	347		581	40,5	G 1/4“	155	138	161		/	24,95
	076	329		620	50	G 1/4“	196	176	200		80	31,23
	110	475		620	50	G 1/4“	196	176	200		80	38,27
250	050	347	68	653	40,5	G 1/4“	155	138	161	266	/	31,35
	076	329		692	50	G 1/4“	196	176	200		/	36,00
	110	475		692	50	G 1/4“	196	176	200		/	43,04
	160	516		712	60	G 1/4“	225	199	220		/	47,56
	230	560		816	72	G 1/4“	249	223	244		80	61,44
300	076	329	77	758	50	G 1/4“	196	176	200	290	/	45,10
	110	475		758	50	G 1/4“	196	176	200		/	52,14
	160	516		778	60	G 1/4“	225	199	220		/	56,66
	230	560		882	72	G 1/4“	249	223	244		80	70,54
	360	696		978	50	G 1/2“	/	278	320		100	90,00
350	110	475	77	805	50	G 1/4“	196	176	200	305	/	59,14
	160	516		825	60	G 1/4“	225	199	220		/	63,66
	230	560		929	72	G 1/4“	249	223	244		80	77,75
	360	696		1025	50	G 1/2“	/	278	320		100	97,10
400	110	475	102	894	50	G 1/4“	196	176	200	378	/	79,94
	160	516		914	60	G 1/4“	225	199	220		/	84,46
	230	560		1018	72	G 1/4“	249	223	244		80	98,55
	360	696		1114	50	G 1/2“	/	278	320		100	117,90
	520	716		1162	50	G 1/2“	/	323	368		100	133,90
450	160	516	114	1062	60	G 1/4“	225	199	220	417	80	117,24
	230	560		1006	72	G 1/4“	249	223	244		/	125,10
	360	696		1182	50	G 1/4“	/	278	320		100	148,20
	520	716		1230	50	G 1/4“	/	323	368		100	164,20
	800	725		1286	50	G 1/2“	/	371	424		100	195,80
500	230	560	127	1069	72	G 1/4“	249	223	244	440	/	115,10
	360	696		1245	50	G 1/4“	/	278	320		100	138,20
	520	716		1293	50	G 1/4“	/	323	368		100	154,20
	800	725		1349	50	G 1/2“	/	371	424		100	185,80
600	520	716	154	1408	50	G 1/4“	/	323	368	495	100	218,20
	800	725		1464	50	G 1/2“	/	371	424		100	249,80

Actuator classification

AD/AS at minimum control pressure of 4 bar			
DN	AD Pst = 4 bar	AS, spring closed, Pst = 4 bar	AS, spring open, Pst = 4 bar
40	AD-004	AS-011-09	AS-008-06
50	AD-006	AS-018-08	AS-011-06
65	AD-008	AS-026-08	AS-018-06
80	AD-008	AS-026-08	AS-018-06
100	AD-018	AS-037-08	AS-026-06
125	AD-026	AS-076-07	AS-050-06
150	AD-037	AS-076-09	AS-076-06
200	AD-050	AS-110-09	AS-110-06
250	AD-076	AS-230-08	AS-160-05
300	AD-110	AS-360-07	AS-230-06
350	AD-160	AS-360-07	AS-360-05
400	AD-160	AS-520-09	AS-360-05
450	AD-230	AS-800-07	AS-520-07
500	AD-360	AS-800-08	AS-800-05
600	AD-800		

Actuator sizing for liquid media, control pressure PN10/16

AD/AS at minimum control pressure of 6 bar			
DN	AD Pst = 6 bar	AS, spring closed, Pst = 6 bar	AS, spring open, Pst = 6 bar
40	AD-004	AS-008-11	AS-006-10
50	AD-004	AS-008-13	AS-008-06
65	AD-006	AS-018-11	AS-011-09
80	AD-006	AS-018-12	AS-011-09
100	AD-011	AS-026-13	AS-018-09
125	AD-018	AS-037-13	AS-026-09
150	AD-026	AS-050-13	AS-050-08
200	AD-037	AS-076-13	AS-076-08
250	AD-050	AS-110-13	AS-110-08
300	AD-076	AS-230-12	AS-160-09
350	AD-110	AS-230-14	AS-230-09
400	AD-110	AS-360-09	AS-230-09
450	AD-160	AS-520-12	AS-360-10
500	AD-230	AS-800-09	AS-520-09
600	AD-520		

Actuator sizing for liquid media, control pressure PN10/16

Dimensioned drawings – Actuator size 004 to 230

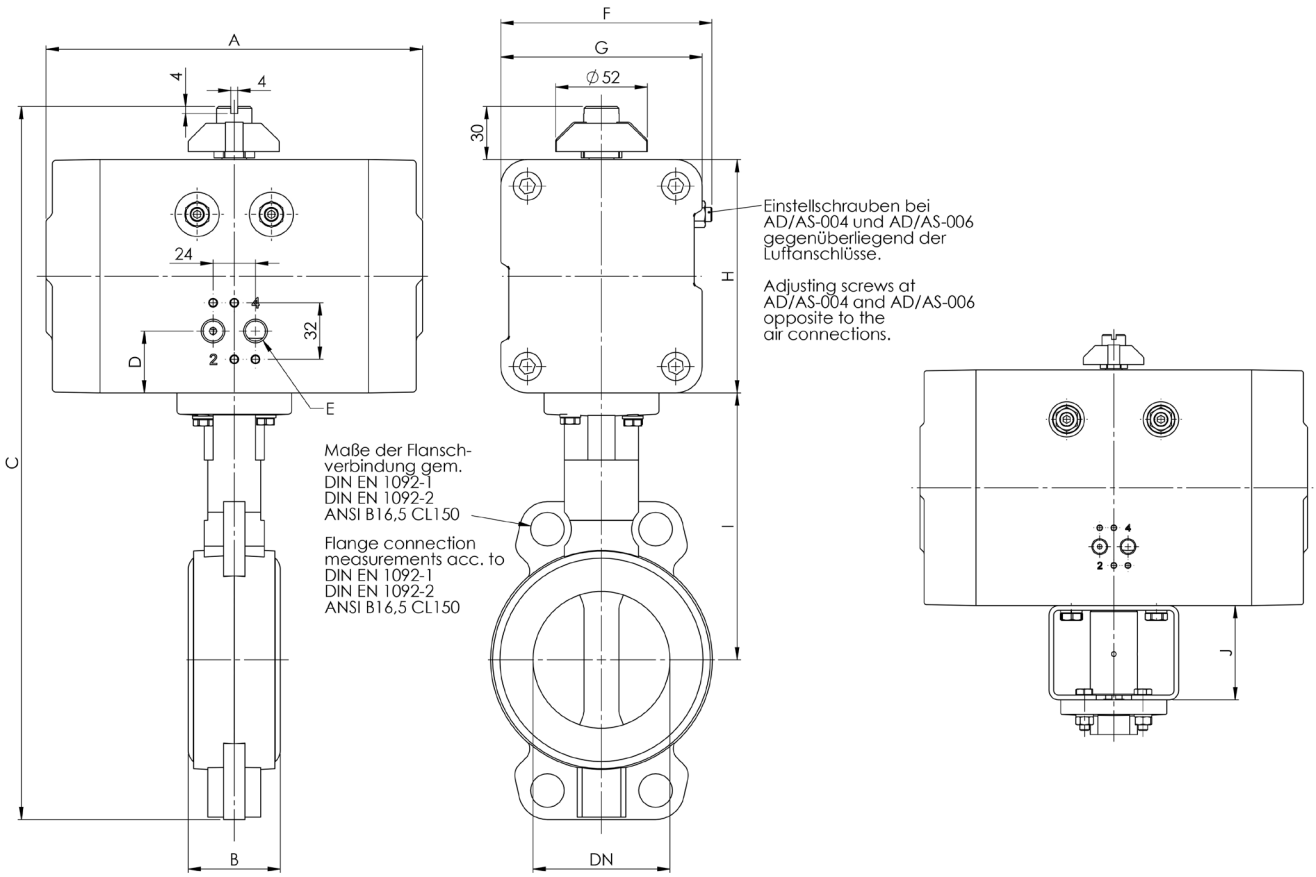

Actuator size 360 to 800

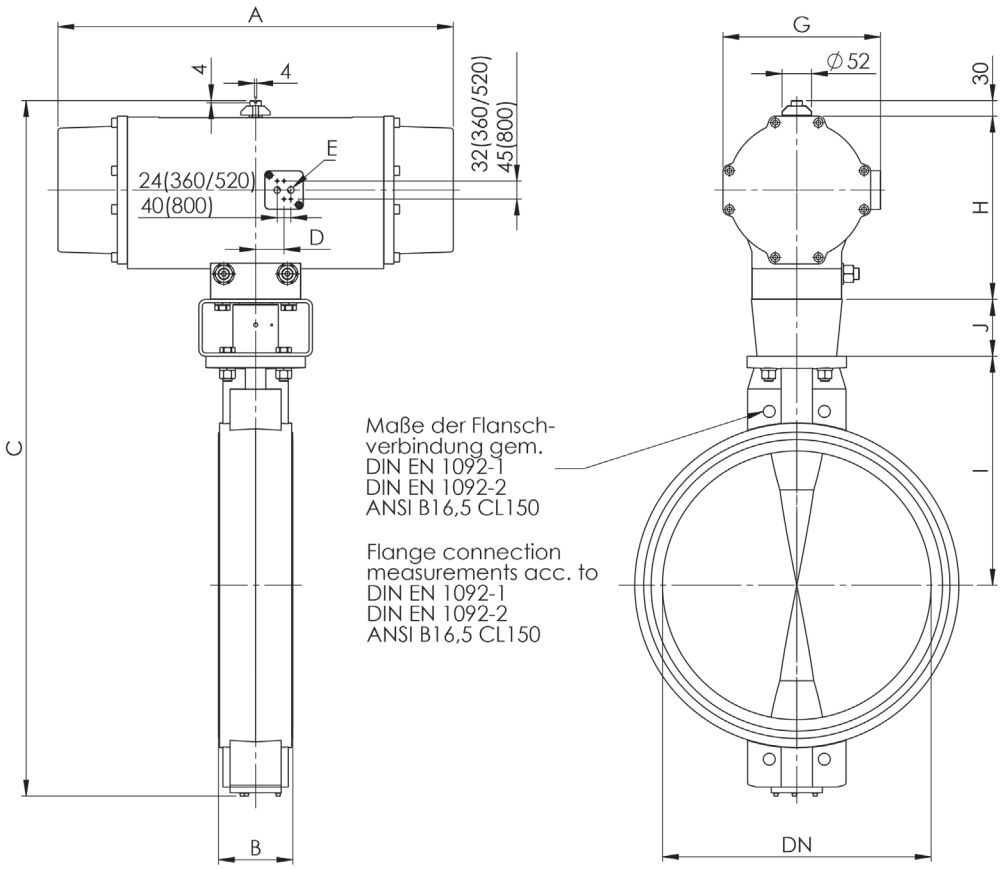

The descriptions and photographs contained in this product specification sheet are supplied by way of information only and are not binding.
bar GmbH reserves the right to carry out any technical and design improvements to its products without prior notice.
Warranty: All sales and contracts for sale are expressly conditioned on the buyer's assent to bar GmbH terms and conditions found on its website at www.bar-gmbh.de.
bar GmbH hereby objects to any term, different from or additonal to bar GmbH terms, contained in any buyer communication in any form,
unless agreed to in a writing signed by an officer of bar GmbH.

bar pneumatische Steuerungssysteme GmbH
Auf der Hohl 1 • 53547 Dattenberg • Germany
Tel. +49 (0) 2644 96070 • Fax +49 (0) 2644 960735
bar-info@wattswater.com • www.bar-gmbh.de

© 2020 Watts